MICROFICHE by FICHE-MAN™

For further Models please visit www.fiche-man.com

Or

email sales@fiche-man.com

This CD is subject to Copyright and may only be distributed by the above Source

PARTS CATALOGUE
MODEL YEAR 2000
YZF-R1M (5JJ4) (U49)
YZF-R1MC (5JJ5) (CALIFORNIA)

STARTING VIN (5JJ4):	JYARN05E*YA000009
STARTING VIN (5JJ5):	JYARN05Y*YA000003

Color Code	Color Name	Abbreviation
121	VIVID RED COCKTAIL 1	VRC1
564	DEEP PURPLISH BLUE METALLIC C	DPBMC

OWNERS	LIT-11626-13-46
ASSEMBLY	LIT-11666-11-25
SERVICE	LIT-11616-11-25 MAIN
	LIT-11616-13-25 SUPP.

CONTENTS

AIR INDUCTION SYSTEM	B6
CAMSHAFT. CHAIN	A9
CARBURETOR	B7-8
CLUTCH	C2-3
COWLING 1	E12 ,F1
COWLING 2	F2-4
CRANKCASE	B10
CRANKCASE COVER 1	B11-12
CRANKSHAFT. PISTON	A6
CYLINDER	A5
ELECTRICAL 1	F12 ,G1
ELECTRICAL 2	G2-3
EXHAUST	B9
FENDER	C10-11
FLASHER LIGHT	F7
FRAME	C8-9
FRONT BRAKE CALIPER	D12
FRONT FORK	D5-6
FRONT MASTER CYLINDER	E5-6
FRONT WHEEL	D11
FUEL TANK	D7-9
GENERATOR	F5
HANDLE SWITCH. LEVER	F11
HEADLIGHT	F9
INTAKE	B4-5
METER	F8
OIL CLEANER	B3
OIL PUMP	B2
RADIATOR. HOSE	A12 ,B1
REAR ARM	D1-2
REAR BRAKE CALIPER	E3
REAR MASTER CYLINDER	E10-11
REAR SUSPENSION	D3
REAR WHEEL	E1-2
SEAT	D10
SHIFT CAM. FORK	C6
SHIFT SHAFT	C7
SIDE COVER	C12
STAND. FOOTREST	E7-9
STARTER	C1
STARTING MOTOR	F6
STEERING	D4
STEERING HANDLE. CABLE	E4
TAILLIGHT	F10
TRANSMISSION	C4-5
VALVE	A7-8
WATER PUMP	A10-11

FOREWORD

-INTRODUCTION-

To The Yamaha Parts Fiche

This parts fiche lists parts and sub-assemblies for the YZF-R1M/R1MC. When preparing a parts order, please refer to the most recently updated microfiche for this model.

THE YAMAHA PARTS FICHE

SYMBOLS

[ ]	Inactive, no longer available
U.R.	Use size (thickness) and/or number as required
U.N.	Use as many as you need
T	Number of teeth in a gear
V	Voltage for light bulbs
S	"S" type oil seal or "S" type circlip
SD,SO,SW	"SD", "SO", or "SW" type oil seal
E,R	"E" or "R" type circlip
F/No.	Frame No. (Applicable Machine No.)
L.M.	Locally made
O.L.	Obtain locally
AP	Alternate Part

SUPERSEDED PART NUMBERS

If part 'A' has been superseded by part 'B', the superseding part number "B" will appear in the part number listing with the superseded part number "A" appearing in parentheses immediately following the description.

EXAMPLE:

Ref. No.	Part No.	Description	Qty.
	(Part 'B')	(Part 'A')	
8	123-45678-00-00	CYLINDER (111-12345-00-00)	1

A part that has been supersede to a kit may be identified by a 99999-00000-00 part number appearing in the part number column. The old superseded part number will appear in parentheses immediately following the description. Listed directly below the 99999 part number will be those parts making up the kit. The description of the parts making up the kit will be preceded by a small black dot ( ) and the description will be indented one letter space.

EXAMPLE:

Ref. No.	Part No.	Description	Qty.
8	99999-12345-00	CYLINDER (111-12345-00-00)	1
	234-56789-00-00	• HEAD, CYLINDER	1

SIZES

Except for steel balls (ball sizes are indicated in inches), all parts sizes are indicated in millimeters as in the following examples:

Hose (Rubber or Vinyl) ..... Inside Diameter - Length

O-Ring ..... Suction Area - Inside Diameter

Washer, Shim, Collar ..... Inside Diameter - Outside Diameter Thickness (Length)

ASSEMBLIES AND COMPONENT PARTS

Assemblies and their component parts, are identified by an indention of one letter space, and the description is preceded by a dot (.). If two main assemblies are listed, and have the same basic description (i.e.: left and right sides of the same assembly), one will immediately follow the other. If each of these main assemblies is made up of almost the same components, these component parts will be listed immediately under the second main assembly line and will be indicated, as noted above.

If the component is the same for both main assemblies, the quantity indicated will be the total required. If the component is not the same for both main assemblies, the quantity for each separate item will be listed separately.

EXAMPLE:

Description	Qty
CARBURETOR ASSY, LEFT	1
CARBURETOR ASSY, RIGHT	1
. JET, PILOT	2
. NOZZLE, MAIN	2
. LEVER, STARTER, LEFT	1
. LEVER, STARTER, RIGHT	1

APPLICABLE SERIAL NO.

(1) Engine Serial No.

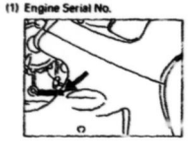

(2) Frame Serial No.

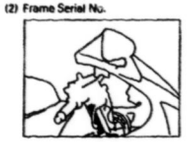

CONTENTS

AIR INDUCTION SYSTEM	B6
CAMSHAFT, CHAIN	A9
CARBURETOR	B7-8
CLUTCH	C2-3
COWLING 1	E12 ,F1
COWLING 2	F2-4
CRANKCASE	B10
CRANKCASE COVER 1	B11-12
CRANKSHAFT, PISTON	A6
CYLINDER	A5
ELECTRICAL 1	F12 ,G1
ELECTRICAL 2	G2-3
EXHAUST	B9
FENDER	C10-11
FLASHER LIGHT	F7
FRAME	C8-9
FRONT BRAKE CALIPER	D12
FRONT FORK	D5-6
FRONT MASTER CYLINDER	E5-6
FRONT WHEEL	D11
FUEL TANK	D7-9
GENERATOR	F5
HANDLE SWITCH, LEVER	F11
HEADLIGHT	F9
INTAKE	B4-5
METER	F8
OIL CLEANER	B3
OIL PUMP	B2
RADIATOR, HOSE	A12 ,B1
REAR ARM	D1-2
REAR BRAKE CALIPER	E3
REAR MASTER CYLINDER	E10-11
REAR SUSPENSION	D3
REAR WHEEL	E1-2
SEAT	D10
SHIFT CAM, FORK	C6
SHIFT SHAFT	C7
SIDE COVER	C12
STAND, FOOTREST	E7-9
STARTER	C1
STARTING MOTOR	F6
STEERING	D4
STEERING HANDLE, CABLE	E4
TAILLIGHT	F10
TRANSMISSION	C4-5
VALVE	A7-8
WATER PUMP	A10-11

FOREWORD

THE YAMAHA PART NUMBER

The Yamaha part number consists of 12 digits. Each number represents a specific piece of information relating to a replacement part. The following is a guide for reading and interpreting the Yamaha part number.

BASIC PART NUMBER CONFIGURATION:

000 - 00000 - 0 0 - 00

- MODEL CODE NO.
- BASIC CODE NO.
- DESIGN CODE NO.
- COLOR CODE NO.
- SIZE CODE NO.
- DESIGN CHANGE CODE NO.

MODEL CODE NUMBER

FIRST THREE DIGITS . . . 000-00000-00-00

Every model in each Yamaha product line is assigned a model number to identify that particular model. All component parts are given the model code number relating to the model on which they were first used.

Example: 4DU-00000-00-00 identifies the XJ600SE.
3FA-00000-00-00 identifies the YFA1E.

BASIC CODE NUMBER

MIDDLE FIVE DIGITS . . . 000-00000-00-00

These "Middle Five Digits" indicate the type of part i.e., piston, rings, lower units, etc. The five digits are broken down as follows:

000 - 0 00 00 -00-00

- MAJOR CLASSIFICATION
- INTERMEDIATE CLASSIFICATION
- MINOR CLASSIFICATION

The "Major Classification" indicates the section to which the parts belong, i.e., engine, electrical etc. The "Intermediate" and "Minor Classifications" indicate more specific details.

Example:

4BR- 1 11 81 -00 -00

- ENGINE SECTION
- CYLINDER HEAD GROUP
- GASKET, CYLINDER HEAD

DESIGN CODE NUMBER: 000-00000-00-00

The design code distinguishes like component parts from one another when specification differences are involved. For example, distinguishing a standard size piston ring from an oversized piston ring.

Example:

4BR-11610- [0] 0-00 Standard Piston Ring Set for XJ600SE
4BR-11610- [2] 0-00 Oversize Piston Ring Set for XJ600SE

DESIGN CHANGE CODE NUMBER: 000-00000-00-00

This code number is used to identify a difference between a new component part and old one when a new part is created by changing the old one.

Example: YFZ350E

2GU-11610-0 [0] -00 PISTON RING SET, STD. - ORIGINAL
2GU-11610-0 [1] -00 PISTON RING SET, STD. - FIRST DESIGN CHANGE

Only major changes to performance, durability, quality, appearance, cost or interchangeability will affect a part number change.

COLOR CODE & SIZE CODE NUMBER: 000-00000-00-00

When applicable, the last two digits of the part number identify:

1. Color Code: The painted color or type of plating or surface treatment used on certain parts.
2. Size Code: The last two digits are also used to show the size of parts (mm). Such as the thickness of shims or the size of pistons.

HARDWARE (Fastener) PART NUMBER CONFIGURATION:

900 0 0 - 00 000 - 00

- Type (Bolt, Nut, Screw)
- Material (Steel, Plastic)
- Surface Finish (Chrome, Zinc)
- Diameter (mm) i.e., 6mm: 06
- Length or Classification (mm) i.e., 25mm: 025
- Added Zeros to Complete 12 Digits

TYPE:

A fastener part number always begins with the number "9" followed by either a 0, 1, 2, 3, 4, 5, 6, 7 or 8 designating one of eight major divisions within this group.

CONTENTS

AIR INDUCTION SYSTEM	B6
CAMSHAFT. CHAIN	A9
CARBURETOR	B7-8
CLUTCH	C2-3
COWLING 1	E12 ,F1
COWLING 2	F2-4
CRANKCASE	B10
CRANKCASE COVER 1	B11-12
CRANKSHAFT. PISTON	A6
CYLINDER	A5
ELECTRICAL 1	F12 ,G1
ELECTRICAL 2	G2-3
EXHAUST	B9
FENDER	C10-11
FLASHER LIGHT	F7
FRAME	C8-9
FRONT BRAKE CALIPER	D12
FRONT FORK	D5-6
FRONT MASTER CYLINDER	E5-6
FRONT WHEEL	D11
FUEL TANK	D7-9
GENERATOR	F5
HANDLE SWITCH. LEVER	F11
HEADLIGHT	F9
INTAKE	B4-5
METER	F8
OIL CLEANER	B3
OIL PUMP	B2
RADIATOR. HOSE	A12 ,B1
REAR ARM	D1-2
REAR BRAKE CALIPER	E3
REAR MASTER CYLINDER	E10-11
REAR SUSPENSION	D3
REAR WHEEL	E1-2
SEAT	D10
SHIFT CAM. FORK	C6
SHIFT SHAFT	C7
SIDE COVER	C12
STAND. FOOTREST	E7-9
STARTER	C1
STARTING MOTOR	F6
STEERING	D4
STEERING HANDLE. CABLE	E4
TAILLIGHT	F10
TRANSMISSION	C4-5
VALVE	A7-8
WATER PUMP	A10-11

FOREWORD

Example:

9 0 000-00000-00 "0" designates various types.
9 1 000-00000-00 "1" designates bolts, cotter pins, etc.
9 2 000-00000-00 "2" designates screw, nuts, etc.
9 3 000-00000-00 "3" designates oil seals, o-rings, bearings, etc.
9 4 000-00000-00 "4" designates spark plugs.
9 5 000-00000-00 "5" designates bolts and nuts.
9 7 000-00000-00 "7" designates ISO bolts.
9 8 000-00000-00 "8" designates ISO screws and nuts.

The only major divisions which the mechanic should become familiar with are those related to the general hardware (nuts, bolts, and washers), since these are the most commonly used and most often replaced items. By knowing how to interpret the part number, the dimensions of a piece of hardware can be determined. This can be very helpful during major engine repair, and general parts replacement.

BOLT EXAMPLE:

91311 - 06 018 - 00

8mm outside diameter — 18mm in length

EXCEPTION:

It is NOT possible to identify the LENGTH of bolts having a 901 prefix. Only the bolt diameter can be identified with this number.

NUT AND WASHER EXAMPLE:

95301 - 08600 - 00 NUT

8mm inside diameter

90201 - 25250 - 00 WASHER

25mm inside diameter

-MODEL LABEL-

A label called "Model Label" is affixed in the location as indicated in (3) below. When using this parts catalogue, please be sure to cross-reference the "model code - production code No." in the catalogue to the "model code - production code No." indicated on the Model Label affixed onto the product concerned.

"MODEL LABEL" INDICATION

1	2
xxxx - xxx	
x	3

1 Model Type Code
2 Production Code No.
3 Coloring Type

○ 4TW1-010
● A

MODEL LABEL AFFIXING LOCATION

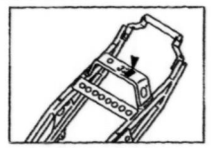

MODEL CODE - PRODUCTION CODE NUMBER OF MODEL LISTED IN THIS PARTS CATALOG

Model Code	Production Code No.	Country (destination)
5JJ4	010	U49
5JJ5	010	CALIFORNIA

CONTENTS

AIR INDUCTION SYSTEM B6
CAMSHAFT. CHAIN A9
CARBURETOR B7-8
CLUTCH C2-3
COWLING 1 E12 ,F1
COWLING 2 F2-4
CRANKCASE B10
CRANKCASE COVER 1 B11-12
CRANKSHAFT. PISTON A6
CYLINDER A5
ELECTRICAL 1 F12 ,G1
ELECTRICAL 2 G2-3
EXHAUST B9
FENDER C10-11
FLASHER LIGHT F7
FRAME C8-9
FRONT BRAKE CALIPER D12
FRONT FORK D5-6
FRONT MASTER CYLINDER E5-6
FRONT WHEEL D11
FUEL TANK D7-9
GENERATOR F5
HANDLE SWITCH. LEVER F11
HEADLIGHT F9
INTAKE B4-5
METER F8
OIL CLEANER B3
OIL PUMP B2
RADIATOR. HOSE A12 ,B1
REAR ARM D1-2
REAR BRAKE CALIPER E3
REAR MASTER CYLINDER E10-11
REAR SUSPENSION D3
REAR WHEEL E1-2
SEAT D10
SHIFT CAM. FORK C6
SHIFT SHAFT C7
SIDE COVER C12
STAND. FOOTREST E7-9
STARTER C1
STARTING MOTOR F6
STEERING D4
STEERING HANDLE. CABLE E4
TAILLIGHT F10
TRANSMISSION C4-5
VALVE A7-8
WATER PUMP A10-11

CYLINDER

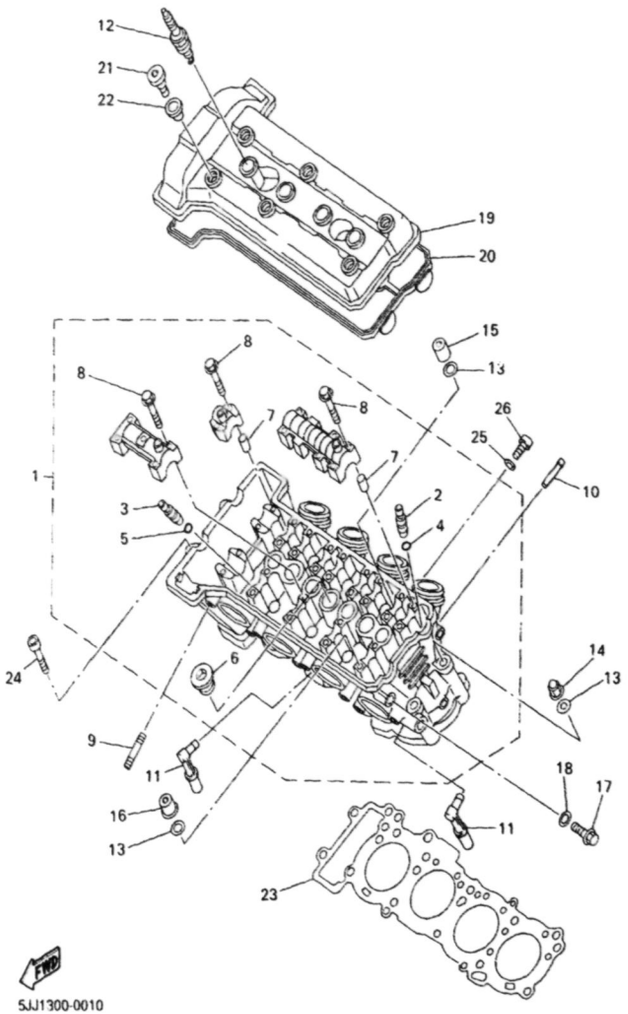

Ref. No.	Part Number	Description	Qty	Remarks
1	5JJ-11102-00-00	CYLINDER HEAD ASSY	1	
2	3TJ-11133-10-00	. GUIDE, INTAKE VALVE	12	
3	1WG-11133-11-00	. GUIDE, INTAKE VALVE	8	
4	93440-07149-00	. CIRCLIP	12	
5	93440-10153-00	. CIRCLIP	8	
6	90340-27001-00	. PLUG, STRAIGHT SCREW	1	
7	91808-16023-00	. PIN, DOWEL	12	
8	90105-06384-00	. BOLT, WASHER BASED	28	
9	95617-08625-00	BOLT, STUD	8	
10	1AE-13582-00-00	PIPE	1	
11	5JJ-14871-00-00	PIPE 1	4	
12	NGK-CR9E-00-00	PLUG, SPARK (NGK R CR9E)	4	UR
13	90201-10013-00	WASHER, PLATE	10	
14	90176-10075-00	NUT, CROWN	2	
15	90179-10683-00	NUT	3	
16	90179-10693-00	NUT	5	
17	95027-06012-00	BOLT, FLANGE	1	
18	90430-06014-00	GASKET	1	
19	4XV-11191-00-00	COVER, CYLINDER HEAD 1	1	
20	4XV-11193-00-00	GASKET, HEAD COVER 1	1	
21	90109-066F0-00	BOLT	6	
22	4KG-1111G-00-00	RUBBER, MOUNT 1	6	
23	4XV-11181-00-00	GASKET, CYLINDER HEAD 1	1	
24	91317-06060-00	BOLT	2	
25	90430-06014-00	GASKET	3	
26	91317-06012-00	BOLT	3	

CONTENTS

AIR INDUCTION SYSTEM	B6
CAMSHAFT. CHAIN	A9
CARBURETOR	B7-8
CLUTCH	C2-3
COWLING 1	E12 ,F1
COWLING 2	F2-4
CRANKCASE	B10
CRANKCASE COVER 1	B11-12
CRANKSHAFT. PISTON	A6
CYLINDER	A5
ELECTRICAL 1	F12 ,G1
ELECTRICAL 2	G2-3
EXHAUST	B9
FENDER	C10-11
FLASHER LIGHT	F7
FRAME	C8-9
FRONT BRAKE CALIPER	D12
FRONT FORK	D5-6
FRONT MASTER CYLINDER	E5-6
FRONT WHEEL	D11
FUEL TANK	D7-9
GENERATOR	F5
HANDLE SWITCH. LEVER	F11
HEADLIGHT	F9
INTAKE	B4-5
METER	F8
OIL CLEANER	B3
OIL PUMP	B2
RADIATOR. HOSE	A12 ,B1
REAR ARM	D1-2
REAR BRAKE CALIPER	E3
REAR MASTER CYLINDER	E10-11
REAR SUSPENSION	D3
REAR WHEEL	E1-2
SEAT	D10
SHIFT CAM. FORK	C6
SHIFT SHAFT	C7
SIDE COVER	C12
STAND. FOOTREST	E7-9
STARTER	C1
STARTING MOTOR	F6
STEERING	D4
STEERING HANDLE. CABLE	E4
TAILLIGHT	F10
TRANSMISSION	C4-5
VALVE	A7-8
WATER PUMP	A10-11

CRANKSHAFT. PISTON

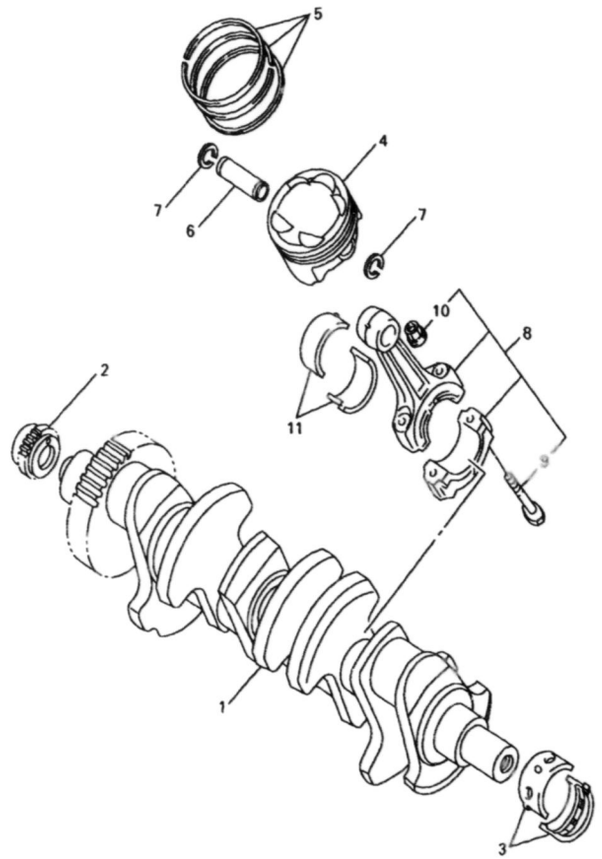

4XV352-8020

Ref. No.	Part Number	Description	Qty	Remarks
1	4XV-11411-00-00	CRANKSHAFT	1	
2	4XV-11549-00-00	SPROCKET, CAM CHAIN	1	
3	3GM-11416-00-00	PLANE BEARING, CRANKSHAFT 1	10	UR BLUE
	3GM-11416-10-00	PLANE BEARING, CRANKSHAFT 1	10	UR BLACK
	3GM-11416-20-00	PLANE BEARING, CRANKSHAFT 1	10	UR BROWN
	3GM-11416-A0-00	PLANE BEARING, CRANKSHAFT 1	10	UR WHITE
	3GM-11416-B0-00	PLANE BEARING, CRANKSHAFT 1	10	UR PURPLE
4	4XV-11631-00-00	PISTON (STD)	4	
5	4XV-11603-00-00	PISTON RING SET (STD)	4	
6	4XV-11633-00-00	PIN, PISTON	4	
7	90468-12069-00	CLIP	8	
8	4XV-11650-00-00	CONNECTING ROD ASSY	4	
9	4XV-11654-00-00	. BOLT, CONNECTING ROD	2	
10	90179-08327-00	. NUT	2	
11	3GM-11656-00-00	PLANE BEARING, CONNECTING ROD	8	UR BLUE
	3GM-11656-10-00	PLANE BEARING, CONNECTING ROD	8	UR BLACK
	3GM-11656-A0-00	PLANE BEARING, CONNECTING ROD	8	UR WHITE
	3GM-11656-B0-00	PLANE BEARING, CONNECTING ROD	8	UR PURPLE

CONTENTS

AIR INDUCTION SYSTEM B6
CAMSHAFT. CHAIN A9
CARBURETOR B7-8
CLUTCH C2-3
COWLING 1 E12 ,F1
COWLING 2 F2-4
CRANKCASE B10
CRANKCASE COVER 1 B11-12
CRANKSHAFT. PISTON A6
CYLINDER A5
ELECTRICAL 1 F12 ,G1
ELECTRICAL 2 G2-3
EXHAUST B9
FENDER C10-11
FLASHER LIGHT F7
FRAME C8-9
FRONT BRAKE CALIPER D12
FRONT FORK D5-6
FRONT MASTER CYLINDER E5-6
FRONT WHEEL D11
FUEL TANK D7-9
GENERATOR F5
HANDLE SWITCH. LEVER F11
HEADLIGHT F9
INTAKE B4-5
METER F8
OIL CLEANER B3
OIL PUMP B2
RADIATOR. HOSE A12 ,B1
REAR ARM D1-2
REAR BRAKE CALIPER E3
REAR MASTER CYLINDER E10-11
REAR SUSPENSION D3
REAR WHEEL E1-2
SEAT D10
SHIFT CAM. FORK C6
SHIFT SHAFT C7
SIDE COVER C12
STAND. FOOTREST E7-9
STARTER C1
STARTING MOTOR F6
STEERING D4
STEERING HANDLE. CABLE E4
TAILLIGHT F10
TRANSMISSION C4-5
VALVE A7-8
WATER PUMP A10-11

VALVE

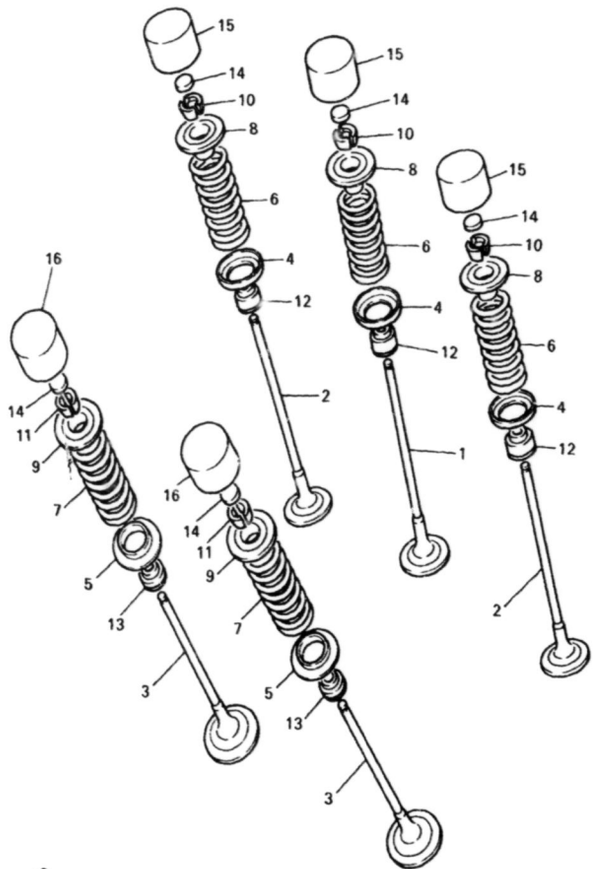

4XV352-8030

Ref. No.	Part Number	Description	Qty	Remarks
1	4XV-12111-00-00	VALVE, INTAKE	4	
2	4XV-12112-00-00	VALVE, INTAKE 2	8	
3	5JJ-12121-00-00	VALVE, EXHAUST	8	
4	1HX-12116-00-00	SEAT, VALVE SPRING	12	
5	3GM-12126-00-00	SEAT, VALVE SPRING 2	8	
6	4XV-12113-00-00	SPRING, VALVE INNER	12	
7	4XV-12114-00-00	SPRING, VALVE OUTER	8	
8	1HX-12117-00-00	RETAINER, VALVE SPRING	12	
9	1WG-12117-00-00	RETAINER, VALVE SPRING	8	
10	1HX-12118-00-00	COTTER, VALVE	24	
11	1WG-12118-00-00	COTTER, VALVE	16	
12	4TV-12119-00-00	SEAL, VALVE STEM	12	
13	4SV-12119-00-00	SEAL, VALVE STEM	8	
14	1HX-12168-00-00	PAD, ADJUSTING 2 (1.20)	20	UR
	1HX-12168-20-00	PAD, ADJUSTING 2 (1.25)	20	UR
	1HX-12168-40-00	PAD, ADJUSTING 2 (1.30)	20	UR
	1HX-12168-60-00	PAD, ADJUSTING 2 (1.35)	20	UR
	1HX-12168-80-00	PAD, ADJUSTING 2 (1.40)	20	UR
	1HX-12168-A0-00	PAD, ADJUSTING 2 (1.45)	20	UR
	1HX-12168-F0-00	PAD, ADJUSTING 2 (1.50)	20	UR
	1HX-12168-H1-00	PAD, ADJUSTING 2 (1.55)	20	UR
	1HX-12168-K1-00	PAD, ADUSTING 2 (1.60)	20	UR
	1HX-12168-M1-00	PAD, ADJUSTING 2 (1.65)	20	UR
	1HX-12168-R1-00	PAD, ADJUSTING 2 (1.70)	20	UR
	1HX-12168-U1-00	PAD, ADJUSTING 2 (1.75)	20	UR
	1HX-12168-W1-00	PAD, ADJUSTING 2 (1.80)	20	UR
	1HX-12168-Y1-00	PAD, ADJUSTING 2 (1.85)	20	UR
	1HX-12169-11-00	PAD, ADJUSTING 2 (1.90)	20	UR
	1HX-12169-31-00	PAD, ADJUSTING 2 (1.95)	20	UR

CONTINUED ON NEXT FRAME ➤

CONTENTS

AIR INDUCTION SYSTEM	B6
CAMSHAFT. CHAIN	A9
CARBURETOR	B7-8
CLUTCH	C2-3
COWLING 1	E12 ,F1
COWLING 2	F2-4
CRANKCASE	B10
CRANKCASE COVER 1	B11-12
CRANKSHAFT. PISTON	A6
CYLINDER	A5
ELECTRICAL 1	F12 ,G1
ELECTRICAL 2	G2-3
EXHAUST	B9
FENDER	C10-11
FLASHER LIGHT	F7
FRAME	C8-9
FRONT BRAKE CALIPER	D12
FRONT FORK	D5-6
FRONT MASTER CYLINDER	E5-6
FRONT WHEEL	D11
FUEL TANK	D7-9
GENERATOR	F5
HANDLE SWITCH. LEVER	F11
HEADLIGHT	F9
INTAKE	B4-5
METER	F8
OIL CLEANER	B3
OIL PUMP	B2
RADIATOR. HOSE	A12 ,B1
REAR ARM	D1-2
REAR BRAKE CALIPER	E3
REAR MASTER CYLINDER	E10-11
REAR SUSPENSION	D3
REAR WHEEL	E1-2
SEAT	D10
SHIFT CAM. FORK	C6
SHIFT SHAFT	C7
SIDE COVER	C12
STAND. FOOTREST	E7-9
STARTER	C1
STARTING MOTOR	F6
STEERING	D4
STEERING HANDLE. CABLE	E4
TAILLIGHT	F10
TRANSMISSION	C4-5
VALVE	A7-8
WATER PUMP	A10-11

VALVE

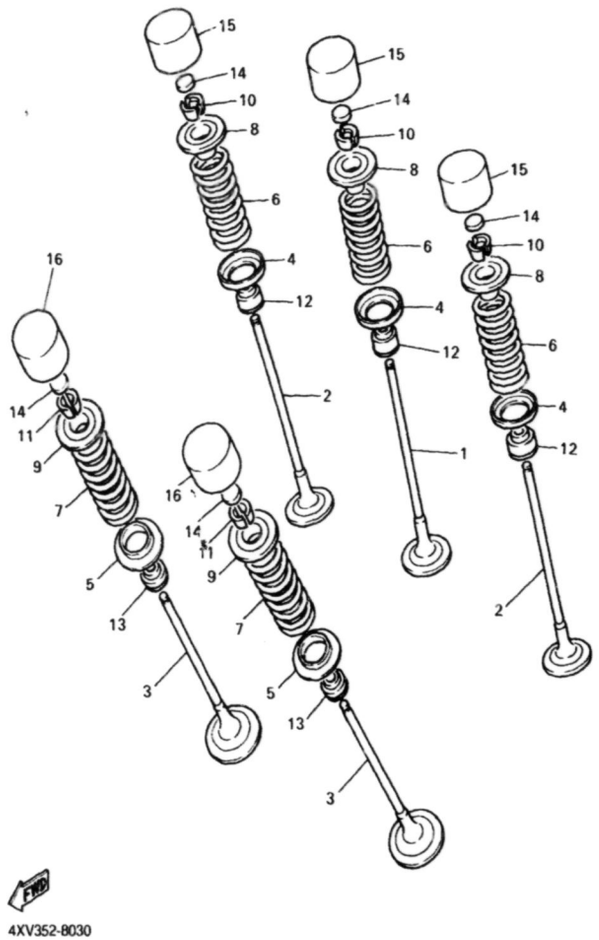

Ref. No.	Part Number	Description	Qty	Remarks
14	1HX-12169-50-00	PAD, ADJUSTING 2 (2.00)	20	UR
	1HX-12169-70-00	PAD, ADJUSTING 2 (2.05)	20	UR
	1HX-12169-90-00	PAD, ADJUSTING 2 (2.10)	20	UR
	1HX-12169-E0-00	PAD, ADJUSTING 2 (2.15)	20	UR
	1HX-12169-G0-00	PAD, ADJUSTING 2 (2.20)	20	UR
	1HX-12169-J0-00	PAD, ADJUSTING 2 (2.25)	20	UR
	1HX-12169-L0-00	PAD, ADJUSTING 2 (2.30)	20	UR
	1HX-12169-N0-00	PAD, ADJUSTING 2 (2.35)	20	UR
	1HX-12169-T0-00	PAD, ADJUSTING 2 (2.40)	20	UR
15	3LN-12153-09-00	LIFTER, VALVE (O/S)	12	UR GREEN
	3LN-12153-20-00	LIFTER, VALVE	12	UR BLUE
16	3FV-12153-09-00	LIFTER, VALVE (O/S)	8	UR GREEN
	3FV-12153-20-00	LIFTER, VALVE	8	UR BLUE

CONTENTS

AIR INDUCTION SYSTEM	B6
CAMSHAFT. CHAIN	A9
CARBURETOR	B7-8
CLUTCH	C2-3
COWLING 1	E12 ,F1
COWLING 2	F2-4
CRANKCASE	B10
CRANKCASE COVER 1	B11-12
CRANKSHAFT. PISTON	A6
CYLINDER	A5
ELECTRICAL 1	F12 ,G1
ELECTRICAL 2	G2-3
EXHAUST	B9
FENDER	C10-11
FLASHER LIGHT	F7
FRAME	C8-9
FRONT BRAKE CALIPER	D12
FRONT FORK	D5-6
FRONT MASTER CYLINDER	E5-6
FRONT WHEEL	D11
FUEL TANK	D7-9
GENERATOR	F5
HANDLE SWITCH. LEVER	F11
HEADLIGHT	F9
INTAKE	B4-5
METER	F8
OIL CLEANER	B3
OIL PUMP	B2
RADIATOR. HOSE	A12 ,B1
REAR ARM	D1-2
REAR BRAKE CALIPER	E3
REAR MASTER CYLINDER	E10-11
REAR SUSPENSION	D3
REAR WHEEL	E1-2
SEAT	D10
SHIFT CAM. FORK	C6
SHIFT SHAFT	C7
SIDE COVER	C12
STAND. FOOTREST	E7-9
STARTER	C1
STARTING MOTOR	F6
STEERING	D4
STEERING HANDLE. CABLE	E4
TAILLIGHT	F10
TRANSMISSION	C4-5
VALVE	A7-8
WATER PUMP	A10-11

CAMSHAFT. CHAIN

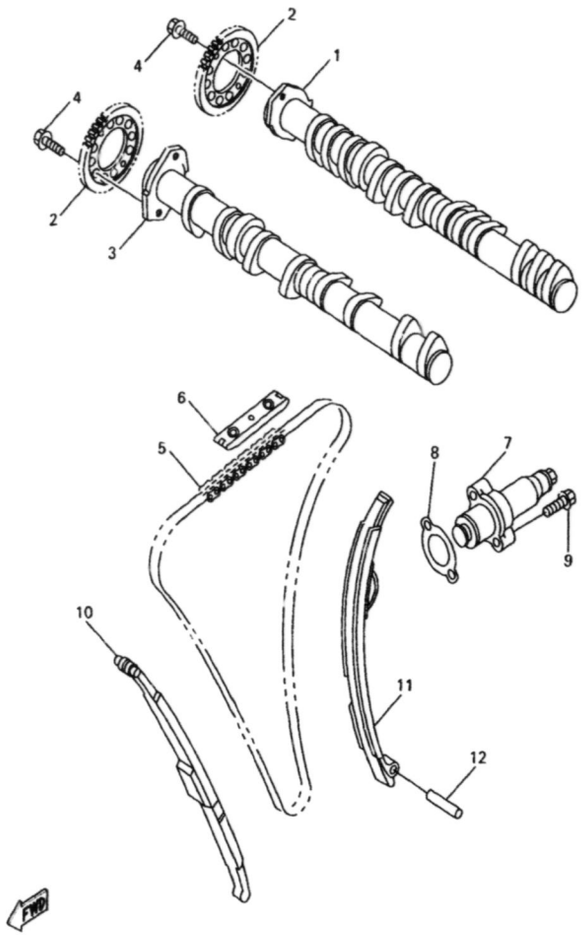

4XV352-8040

Ref. No.	Part Number	Description	Qty	Remarks
1	5JJ-12171-00-00	CAMSHAFT 1	1	
2	4XV-12176-00-00	SPROCKET, CAM CHAIN	2	
3	5JJ-12181-00-00	CAMSHAFT 2	1	
4	90105-07342-00	BOLT, WASHER BASED	4	
5	94591-49130-00	CHAIN	1	
6	5BE-12241-00-00	GUIDE, STOPPER 2	1	
7	4XV-12210-00-00	TENSIONER ASSY, CAM CHAIN	1	
8	4FM-12213-00-00	GASKET, TENSIONER CASE	1	
9	95027-06025-00	BOLT, FLANGE	2	
10	4XV-12251-00-00	DAMPER, CHAIN 1	1	
11	4XV-12252-00-00	DAMPER, CHAIN 2	1	
12	93607-44190-00	PIN, DOWEL	1	

CONTENTS

AIR INDUCTION SYSTEM	B6
CAMSHAFT. CHAIN	A9
CARBURETOR	B7-8
CLUTCH	C2-3
COWLING 1	E12 ,F1
COWLING 2	F2-4
CRANKCASE	B10
CRANKCASE COVER 1	B11-12
CRANKSHAFT. PISTON	A6
CYLINDER	A5
ELECTRICAL 1	F12 ,G1
ELECTRICAL 2	G2-3
EXHAUST	B9
FENDER	C10-11
FLASHER LIGHT	F7
FRAME	C8-9
FRONT BRAKE CALIPER	D12
FRONT FORK	D5-6
FRONT MASTER CYLINDER	E5-6
FRONT WHEEL	D11
FUEL TANK	D7-9
GENERATOR	F5
HANDLE SWITCH. LEVER	F11
HEADLIGHT	F9
INTAKE	B4-5
METER	F8
OIL CLEANER	B3
OIL PUMP	B2
RADIATOR. HOSE	A12 ,B1
REAR ARM	D1-2
REAR BRAKE CALIPER	E3
REAR MASTER CYLINDER	E10-11
REAR SUSPENSION	D3
REAR WHEEL	E1-2
SEAT	D10
SHIFT CAM. FORK	C6
SHIFT SHAFT	C7
SIDE COVER	C12
STAND. FOOTREST	E7-9
STARTER	C1
STARTING MOTOR	F6
STEERING	D4
STEERING HANDLE. CABLE	E4
TAILLIGHT	F10
TRANSMISSION	C4-5
VALVE	A7-8
WATER PUMP	A10-11

WATER PUMP

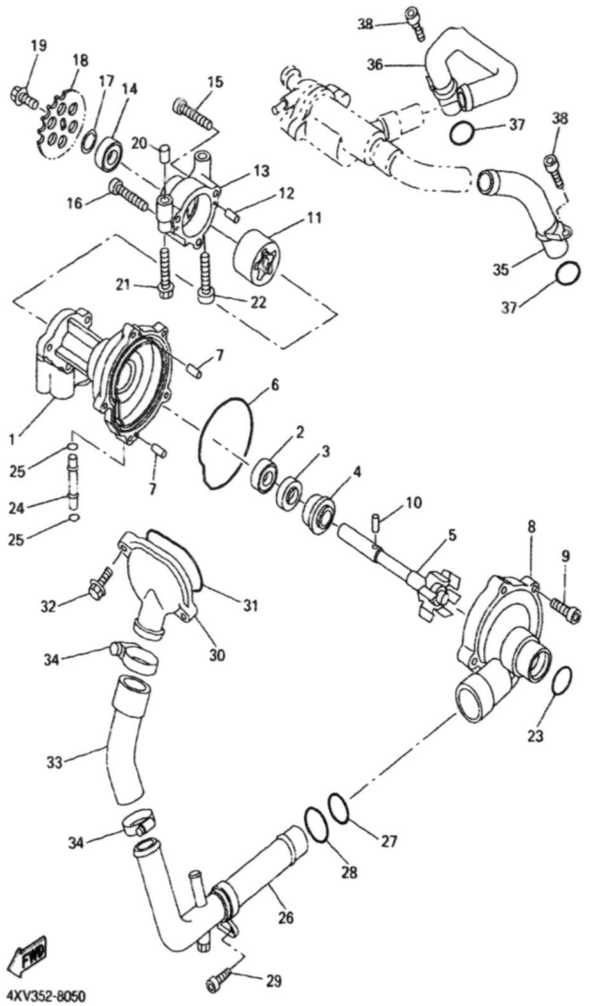

Ref. No.	Part Number	Description	Qty	Remarks
1	4XV-12421-00-00	HOUSING, WATER PUMP	1	
2	93306-00106-00	BEARING	1	
3	93102-12372-00	OIL SEAL	1	
4	11H-12438-00-00	SEAL, MECHANICAL	1	
5	4XV-12450-00-00	IMPELLER SHAFT ASSY	1	
6	4XV-12439-00-00	O-RING	1	
7	93604-10011-00	PIN, DOWEL	2	
8	4XV-12422-00-00	COVER, HOUSING	1	
9	91317-06025-00	BOLT	5	
10	93603-17070-00	PIN, DOWEL	1	
11	4XV-13310-00-00	ROTOR ASSY 1	1	
12	93603-12007-00	PIN, DOWEL	2	
13	4XV-13336-00-00	HOUSING, ROTOR	1	
14	93306-00106-00	BEARING	1	
15	91317-06035-00	BOLT	2	
16	91317-06040-00	BOLT	1	
17	90201-12541-00	WASHER, PLATE	1	
18	4XV-13355-00-00	SPROCKET, DRIVEN	1	
19	90105-06154-00	BOLT, WASHER BASED	1	
20	91808-30031-00	PIN, DOWEL	1	
21	95817-06045-00	BOLT, FLANGE	1	
22	91317-06045-00	BOLT	1	
23	93210-357A2-00	O-RING	1	
24	4XV-12485-00-00	PIPE 5	1	
25	93210-06667-00	O-RING	2	
26	5JJ-12481-00-00	PIPE 1	1	
27	93210-235A1-00	O-RING	1	
28	93210-27370-00	O-RING	1	
29	90110-06226-00	BOLT, HEXAGON SOCKET HEAD	1	

CONTINUED ON NEXT FRAME ➤

CONTENTS

AIR INDUCTION SYSTEM	B6
CAMSHAFT. CHAIN	A9
CARBURETOR	B7-8
CLUTCH	C2-3
COWLING 1	E12 ,F1
COWLING 2	F2-4
CRANKCASE	B10
CRANKCASE COVER 1	B11-12
CRANKSHAFT. PISTON	A6
CYLINDER	A5
ELECTRICAL 1	F12 ,G1
ELECTRICAL 2	G2-3
EXHAUST	B9
FENDER	C10-11
FLASHER LIGHT	F7
FRAME	C8-9
FRONT BRAKE CALIPER	D12
FRONT FORK	D5-6
FRONT MASTER CYLINDER	E5-6
FRONT WHEEL	D11
FUEL TANK	D7-9
GENERATOR	F5
HANDLE SWITCH. LEVER	F11
HEADLIGHT	F9
INTAKE	B4-5
METER	F8
OIL CLEANER	B3
OIL PUMP	B2
RADIATOR. HOSE	A12 ,B1
REAR ARM	D1-2
REAR BRAKE CALIPER	E3
REAR MASTER CYLINDER	E10-11
REAR SUSPENSION	D3
REAR WHEEL	E1-2
SEAT	D10
SHIFT CAM. FORK	C6
SHIFT SHAFT	C7
SIDE COVER	C12
STAND. FOOTREST	E7-9
STARTER	C1
STARTING MOTOR	F6
STEERING	D4
STEERING HANDLE. CABLE	E4
TAILLIGHT	F10
TRANSMISSION	C4-5
VALVE	A7-8
WATER PUMP	A10-11

WATER PUMP

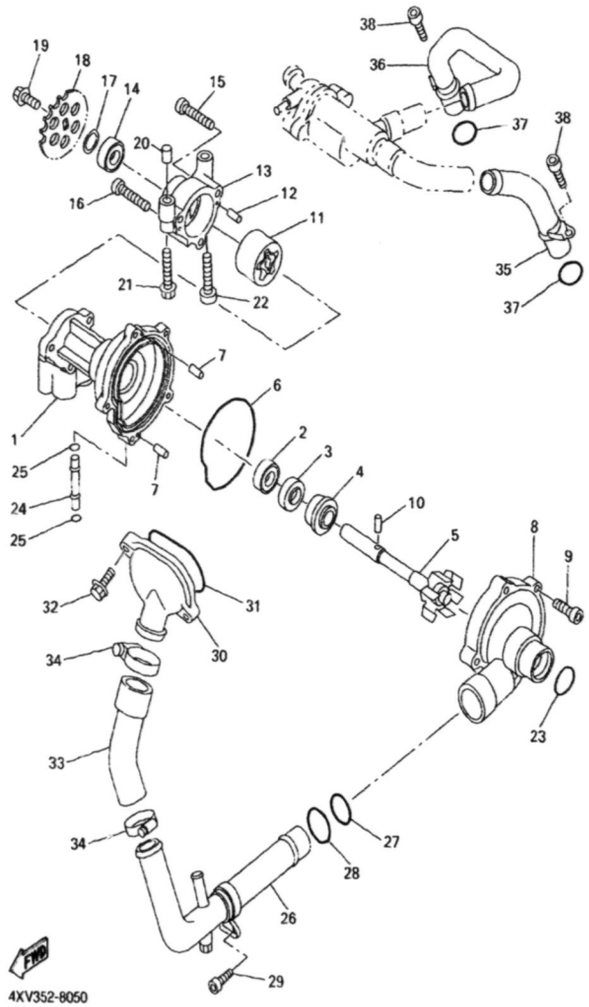

Ref. No.	Part Number	Description	Qty	Remarks
30	5JJ-12469-00-00	JOINT 1	1	
31	93210-47675-00	O-RING	1	
32	95027-06020-00	BOLT, FLANGE	2	
33	5JJ-12576-00-00	HOSE 1	1	
34	90450-38040-00	HOSE CLAMP ASSY	2	
35	4XV-12482-00-00	PIPE 2	1	
36	4XV-12483-00-00	PIPE 3	1	
37	93210-18417-00	O-RING	2	
38	91317-06016-00	BOLT	2	

CONTENTS

AIR INDUCTION SYSTEM	B6
CAMSHAFT. CHAIN	A9
CARBURETOR	B7-8
CLUTCH	C2-3
COWLING 1	E12 ,F1
COWLING 2	F2-4
CRANKCASE	B10
CRANKCASE COVER 1	B11-12
CRANKSHAFT. PISTON	A6
CYLINDER	A5
ELECTRICAL 1	F12 ,G1
ELECTRICAL 2	G2-3
EXHAUST	B9
FENDER	C10-11
FLASHER LIGHT	F7
FRAME	C8-9
FRONT BRAKE CALIPER	D12
FRONT FORK	D5-6
FRONT MASTER CYLINDER	E5-6
FRONT WHEEL	D11
FUEL TANK	D7-9
GENERATOR	F5
HANDLE SWITCH. LEVER	F11
HEADLIGHT	F9
INTAKE	B4-5
METER	F8
OIL CLEANER	B3
OIL PUMP	B2
RADIATOR. HOSE	A12 ,B1
REAR ARM	D1-2
REAR BRAKE CALIPER	E3
REAR MASTER CYLINDER	E10-11
REAR SUSPENSION	D3
REAR WHEEL	E1-2
SEAT	D10
SHIFT CAM. FORK	C6
SHIFT SHAFT	C7
SIDE COVER	C12
STAND. FOOTREST	E7-9
STARTER	C1
STARTING MOTOR	F6
STEERING	D4
STEERING HANDLE. CABLE	E4
TAILLIGHT	F10
TRANSMISSION	C4-5
VALVE	A7-8
WATER PUMP	A10-11

RADIATOR. HOSE

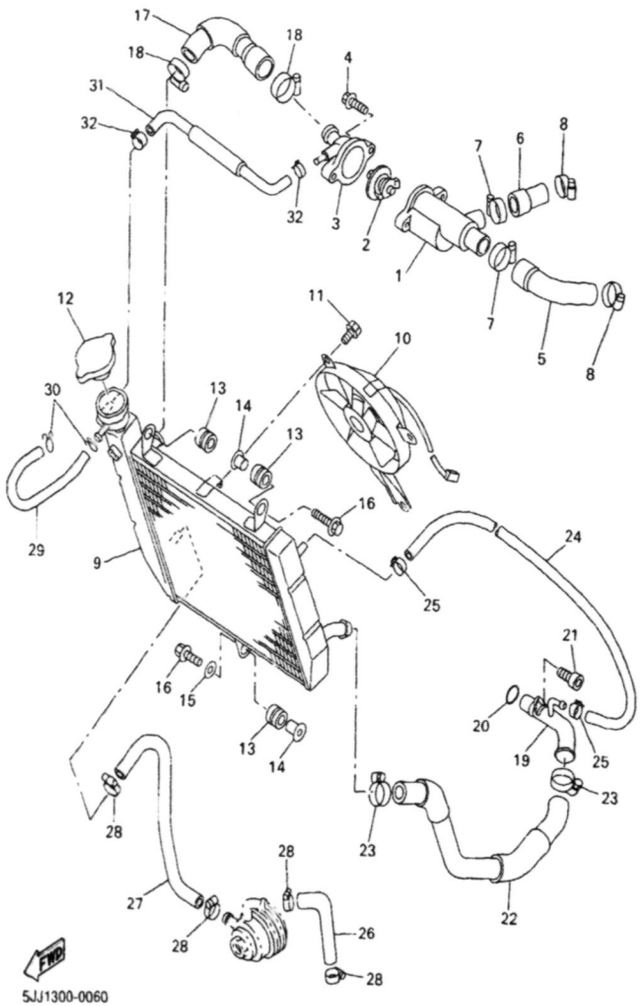

Ref. No.	Part Number	Description	Qty	Remarks
1	4XV-12417-00-00	HOUSING, THERMOSTAT	1	
2	4FM-12410-00-00	THERMOSTAT ASSY	1	
3	4XV-12413-00-00	COVER, THERMOSTAT	1	
4	95027-06025-00	BOLT, FLANGE	2	
5	4XV-12577-00-00	HOSE 2	1	
6	4XV-12578-00-00	HOSE 3	1	
7	90450-32015-00	HOSE CLAMP ASSY	2	
8	90450-28014-00	HOSE CLAMP ASSY	2	
9	5JJ-12461-00-00	RADIATOR ASSY	1	
10	4XV-12405-00-00	BLOWER ASSY	1	
11	95817-06010-00	BOLT, FLANGE	6	
12	4JH-12462-00-00	CAP, RADIATOR	1	
13	90480-15363-00	GROMMET	3	
14	90387-07391-00	COLLAR	2	
15	90201-06071-00	WASHER, PLATE	1	
16	95827-06025-00	BOLT, FLANGE	2	
17	4XV-12579-00-00	HOSE 4	1	
18	90450-38040-00	HOSE CLAMP ASSY	2	
19	4XV-12484-00-00	PIPE 4	1	
20	93210-23787-00	O-RING	1	
21	90110-06226-00	BOLT, HEXAGON SOCKET HEAD	1	
22	4XV-12551-00-00	HOSE 7	1	
23	90450-38040-00	HOSE CLAMP ASSY	2	
24	4XV-1243A-00-00	HOSE 1	1	
25	90467-11090-00	CLIP	2	
26	5JJ-12588-00-00	HOSE 5	1	
27	5JJ-12589-00-00	HOSE 6	1	
28	90450-22017-00	HOSE CLAMP ASSY	4	

CONTINUED ON NEXT FRAME ➤

CONTENTS

AIR INDUCTION SYSTEM	B6
CAMSHAFT. CHAIN	A9
CARBURETOR	B7-8
CLUTCH	C2-3
COWLING 1	E12 ,F1
COWLING 2	F2-4
CRANKCASE	B10
CRANKCASE COVER 1	B11-12
CRANKSHAFT. PISTON	A6
CYLINDER	A5
ELECTRICAL 1	F12 ,G1
ELECTRICAL 2	G2-3
EXHAUST	B9
FENDER	C10-11
FLASHER LIGHT	F7
FRAME	C8-9
FRONT BRAKE CALIPER	D12
FRONT FORK	D5-6
FRONT MASTER CYLINDER	E5-6
FRONT WHEEL	D11
FUEL TANK	D7-9
GENERATOR	F5
HANDLE SWITCH. LEVER	F11
HEADLIGHT	F9
INTAKE	B4-5
METER	F8
OIL CLEANER	B3
OIL PUMP	B2
RADIATOR. HOSE	A12 ,B1
REAR ARM	D1-2
REAR BRAKE CALIPER	E3
REAR MASTER CYLINDER	E10-11
REAR SUSPENSION	D3
REAR WHEEL	E1-2
SEAT	D10
SHIFT CAM. FORK	C6
SHIFT SHAFT	C7
SIDE COVER	C12
STAND. FOOTREST	E7-9
STARTER	C1
STARTING MOTOR	F6
STEERING	D4
STEERING HANDLE. CABLE	E4
TAILLIGHT	F10
TRANSMISSION	C4-5
VALVE	A7-8
WATER PUMP	A10-11

RADIATOR. HOSE

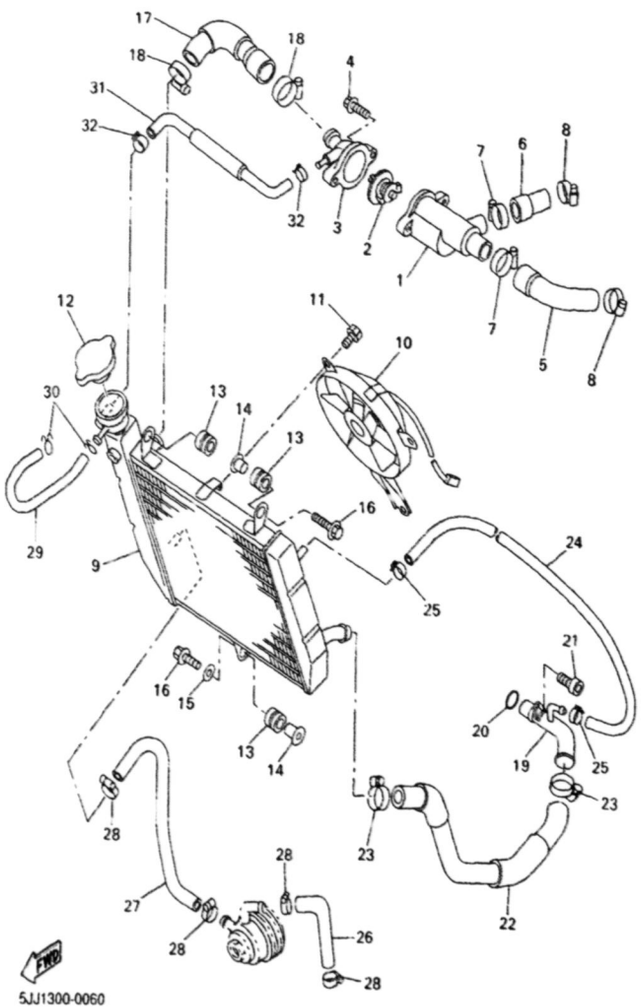

Ref. No.	Part Number	Description	Qty	Remarks
29	90445-09074-00	HOSE (L130)	1	
30	90467-08003-00	CLIP	2	
31	4XV-12552-00-00	HOSE 8	1	
32	90467-11090-00	CLIP	2	

CONTENTS

AIR INDUCTION SYSTEM	B6
CAMSHAFT. CHAIN	A9
CARBURETOR	B7-8
CLUTCH	C2-3
COWLING 1	E12 ,F1
COWLING 2	F2-4
CRANKCASE	B10
CRANKCASE COVER 1	B11-12
CRANKSHAFT. PISTON	A6
CYLINDER	A5
ELECTRICAL 1	F12 ,G1
ELECTRICAL 2	G2-3
EXHAUST	B9
FENDER	C10-11
FLASHER LIGHT	F7
FRAME	C8-9
FRONT BRAKE CALIPER	D12
FRONT FORK	D5-6
FRONT MASTER CYLINDER	E5-6
FRONT WHEEL	D11
FUEL TANK	D7-9
GENERATOR	F5
HANDLE SWITCH. LEVER	F11
HEADLIGHT	F9
INTAKE	B4-5
METER	F8
OIL CLEANER	B3
OIL PUMP	B2
RADIATOR. HOSE	A12 ,B1
REAR ARM	D1-2
REAR BRAKE CALIPER	E3
REAR MASTER CYLINDER	E10-11
REAR SUSPENSION	D3
REAR WHEEL	E1-2
SEAT	D10
SHIFT CAM. FORK	C6
SHIFT SHAFT	C7
SIDE COVER	C12
STAND. FOOTREST	E7-9
STARTER	C1
STARTING MOTOR	F6
STEERING	D4
STEERING HANDLE. CABLE	E4
TAILLIGHT	F10
TRANSMISSION	C4-5
VALVE	A7-8
WATER PUMP	A10-11

OIL PUMP

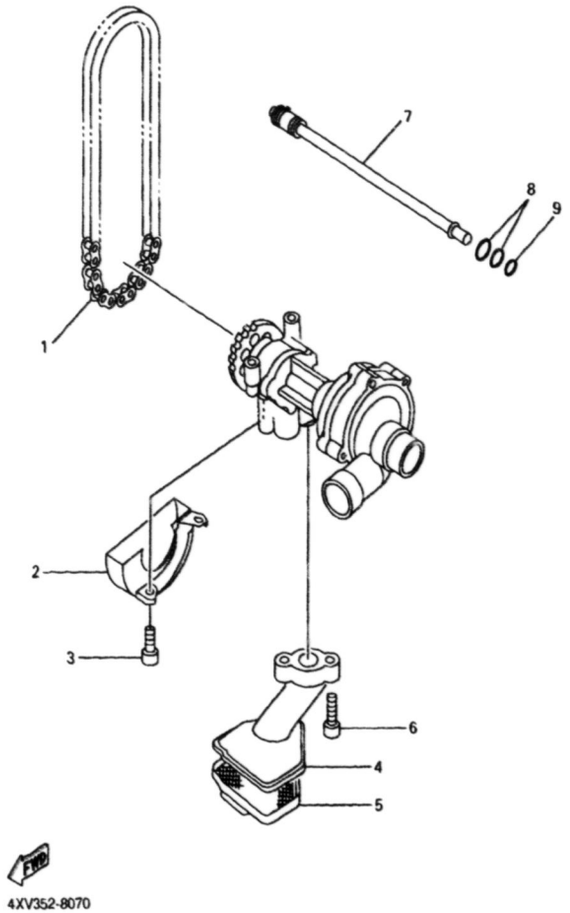

Ref. No.	Part Number	Description	Qty	Remarks
1	94580-25078-00	CHAIN (DID25 78LE)	1	
2	4XV-13327-00-00	COVER, PUMP GEAR	1	
3	91317-05012-00	BOLT	1	
4	4XV-13412-00-00	HOUSING, STRAINER	1	
5	4XV-13411-00-00	STRAINER, OIL	1	
6	91317-06020-00	BOLT	2	
7	5JJ-1316E-00-00	PIPE, DELEVERY 5	1	
8	93210-09165-00	O-RING	2	
9	93210-06667-00	O-RING	1	

CONTENTS

AIR INDUCTION SYSTEM	B6
CAMSHAFT. CHAIN	A9
CARBURETOR	B7-8
CLUTCH	C2-3
COWLING 1	E12 ,F1
COWLING 2	F2-4
CRANKCASE	B10
CRANKCASE COVER 1	B11-12
CRANKSHAFT. PISTON	A6
CYLINDER	A5
ELECTRICAL 1	F12 ,G1
ELECTRICAL 2	G2-3
EXHAUST	B9
FENDER	C10-11
FLASHER LIGHT	F7
FRAME	C8-9
FRONT BRAKE CALIPER	D12
FRONT FORK	D5-6
FRONT MASTER CYLINDER	E5-6
FRONT WHEEL	D11
FUEL TANK	D7-9
GENERATOR	F5
HANDLE SWITCH. LEVER	F11
HEADLIGHT	F9
INTAKE	B4-5
METER	F8
OIL CLEANER	B3
OIL PUMP	B2
RADIATOR. HOSE	A12 ,B1
REAR ARM	D1-2
REAR BRAKE CALIPER	E3
REAR MASTER CYLINDER	E10-11
REAR SUSPENSION	D3
REAR WHEEL	E1-2
SEAT	D10
SHIFT CAM. FORK	C6
SHIFT SHAFT	C7
SIDE COVER	C12
STAND. FOOTREST	E7-9
STARTER	C1
STARTING MOTOR	F6
STEERING	D4
STEERING HANDLE. CABLE	E4
TAILLIGHT	F10
TRANSMISSION	C4-5
VALVE	A7-8
WATER PUMP	A10-11

OIL CLEANER

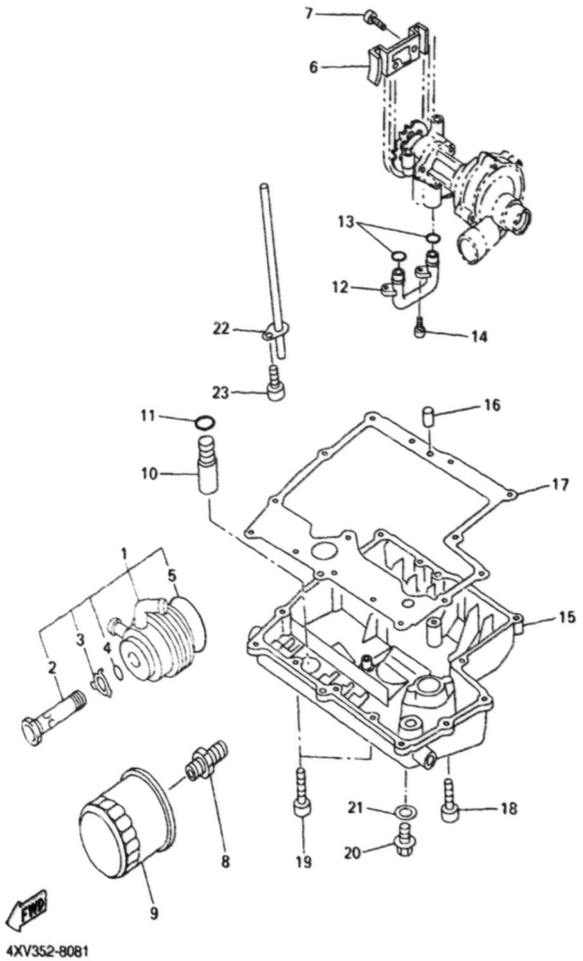

Ref. No.	Part Number	Description	Qty	Remarks
1	5JJ-13470-00-00	OIL COOLER ASSY	1	
2	4XV-12822-00-00	. BOLT, UNION	1	
3	4XV-13473-00-00	. O-RING	1	
4	4XV-13318-00-00	. WASHER	1	
5	4XV-13475-00-00	. GASKET	1	
6	4XV-13898-00-00	HOLDER	1	
7	91317-06012-00	BOLT	1	
8	90401-20145-00	BOLT, UNION	1	
9	5GH-13440-00-00	ELEMENT ASSY, OIL CLEANER	1	
10	4XV-13490-00-00	RELIEF VALVE ASSY	1	
11	93210-15566-00	O-RING	1	
12	4XV-13416-00-00	PIPE, OIL 1	1	
13	93210-14579-00	O-RING	2	
14	91317-06012-00	BOLT	2	
15	4XV-13417-01-00	COVER, STRAINER	1	
16	99530-08012-00	PIN, DOWEL	2	
17	4XV-13414-00-00	GASKET, STRAINER COVER	1	
18	91317-06025-00	BOLT	13	
19	90110-06225-00	BOLT, HEXAGON SOCKET HEAD	2	
20	90340-14132-00	PLUG, STRAIGHT SCREW	1	
21	214-11198-01-00	GASKET	1	
22	5JJ-13161-00-00	PIPE, DELIVERY 1	1	
23	91317-06012-00	BOLT	1	

CONTENTS

AIR INDUCTION SYSTEM	B6
CAMSHAFT. CHAIN	A9
CARBURETOR	B7-8
CLUTCH	C2-3
COWLING 1	E12 ,F1
COWLING 2	F2-4
CRANKCASE	B10
CRANKCASE COVER 1	B11-12
CRANKSHAFT. PISTON	A6
CYLINDER	A5
ELECTRICAL 1	F12 ,G1
ELECTRICAL 2	G2-3
EXHAUST	B9
FENDER	C10-11
FLASHER LIGHT	F7
FRAME	C8-9
FRONT BRAKE CALIPER	D12
FRONT FORK	D5-6
FRONT MASTER CYLINDER	E5-6
FRONT WHEEL	D11
FUEL TANK	D7-9
GENERATOR	F5
HANDLE SWITCH. LEVER	F11
HEADLIGHT	F9
INTAKE	B4-5
METER	F8
OIL CLEANER	B3
OIL PUMP	B2
RADIATOR. HOSE	A12 ,B1
REAR ARM	D1-2
REAR BRAKE CALIPER	E3
REAR MASTER CYLINDER	E10-11
REAR SUSPENSION	D3
REAR WHEEL	E1-2
SEAT	D10
SHIFT CAM. FORK	C6
SHIFT SHAFT	C7
SIDE COVER	C12
STAND. FOOTREST	E7-9
STARTER	C1
STARTING MOTOR	F6
STEERING	D4
STEERING HANDLE. CABLE	E4
TAILLIGHT	F10
TRANSMISSION	C4-5
VALVE	A7-8
WATER PUMP	A10-11

INTAKE

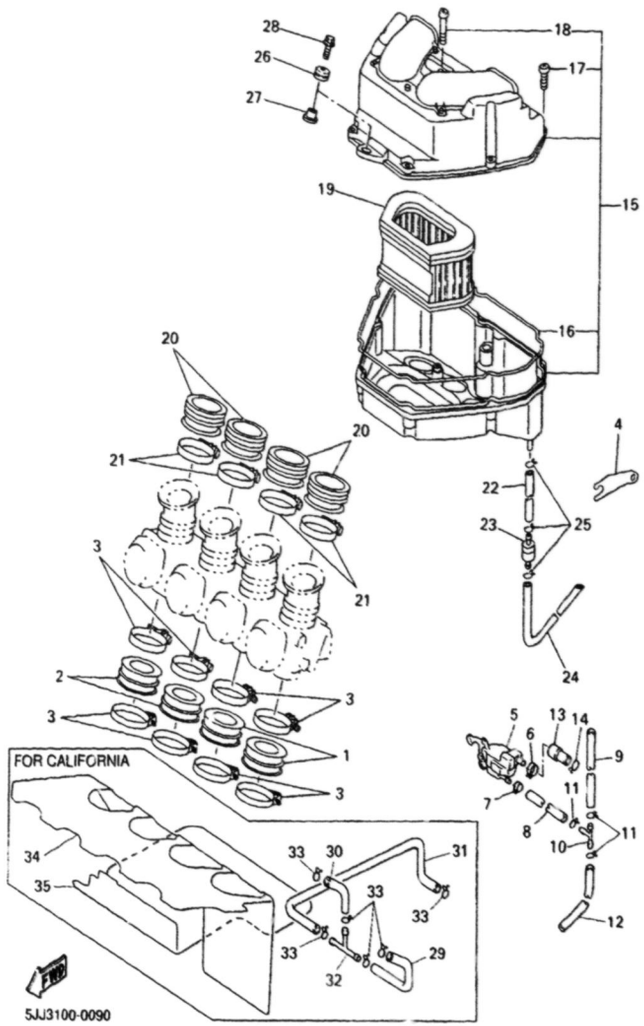

Ref. No.	Part Number	Description	Qty	Remarks
1	4XV-13597-00-00	JOINT, CARBURETOR 3	2	
2	4XV-13598-00-00	JOINT, CARBURETOR 4	2	
3	90450-57044-00	HOSE CLAMP ASSY	8	
4	5JJ-14414-00-00	STAY 2	1	
5	5JJ-1446A-00-00	SURGE TANK ASSY	1	
6	90467-16098-00	CLIP	1	
7	90467-11090-00	CLIP	1	
8	90445-11730-00	HOSE (L280)	1	
9	90445-10143-00	HOSE	1	
10	90413-07007-00	WAY 3	1	
11	90467-10041-00	CLIP	3	
12	90445-117K0-00	HOSE (L590)	1	
13	5JJ-14294-00-00	HOSE	1	
14	90467-13042-00	CLIP	1	
15	5JJ-14401-00-00	AIR CLEANER CASE ASSY	1	
16	4XV-14452-00-00	. SEAL	1	
17	98507-05025-00	. SCREW, PAN HEAD	7	
18	98507-05045-00	. SCREW, PAN HEAD	1	
19	4XV-14451-00-00	ELEMENT, AIR CLEANER	1	
20	5JJ-14453-00-00	JOINT, AIR CLEANER 1	4	
21	90450-75083-00	HOSE CLAMP ASSY	4	
22	90445-11452-00	HOSE (L125)	1	
23	4X7-2149Y-00-00	FILTER ASSY	1	
24	90445-11013-00	HOSE	1	
25	90467-10041-00	CLIP	3	
26	90480-12314-00	GROMMET	1	
27	90387-065J6-00	COLLAR	1	
28	95817-06020-00	BOLT, FLANGE	1	
29	4XV-14465-00-00	PIPE	1	(5JJ4)

CONTINUED ON NEXT FRAME ➤

CONTENTS

AIR INDUCTION SYSTEM	B6
CAMSHAFT. CHAIN	A9
CARBURETOR	B7-8
CLUTCH	C2-3
COWLING 1	E12 ,F1
COWLING 2	F2-4
CRANKCASE	B10
CRANKCASE COVER 1	B11-12
CRANKSHAFT. PISTON	A6
CYLINDER	A5
ELECTRICAL 1	F12 ,G1
ELECTRICAL 2	G2-3
EXHAUST	B9
FENDER	C10-11
FLASHER LIGHT	F7
FRAME	C8-9
FRONT BRAKE CALIPER	D12
FRONT FORK	D5-6
FRONT MASTER CYLINDER	E5-6
FRONT WHEEL	D11
FUEL TANK	D7-9
GENERATOR	F5
HANDLE SWITCH. LEVER	F11
HEADLIGHT	F9
INTAKE	B4-5
METER	F8
OIL CLEANER	B3
OIL PUMP	B2
RADIATOR. HOSE	A12 ,B1
REAR ARM	D1-2
REAR BRAKE CALIPER	E3
REAR MASTER CYLINDER	E10-11
REAR SUSPENSION	D3
REAR WHEEL	E1-2
SEAT	D10
SHIFT CAM. FORK	C6
SHIFT SHAFT	C7
SIDE COVER	C12
STAND. FOOTREST	E7-9
STARTER	C1
STARTING MOTOR	F6
STEERING	D4
STEERING HANDLE. CABLE	E4
TAILLIGHT	F10
TRANSMISSION	C4-5
VALVE	A7-8
WATER PUMP	A10-11

INTAKE

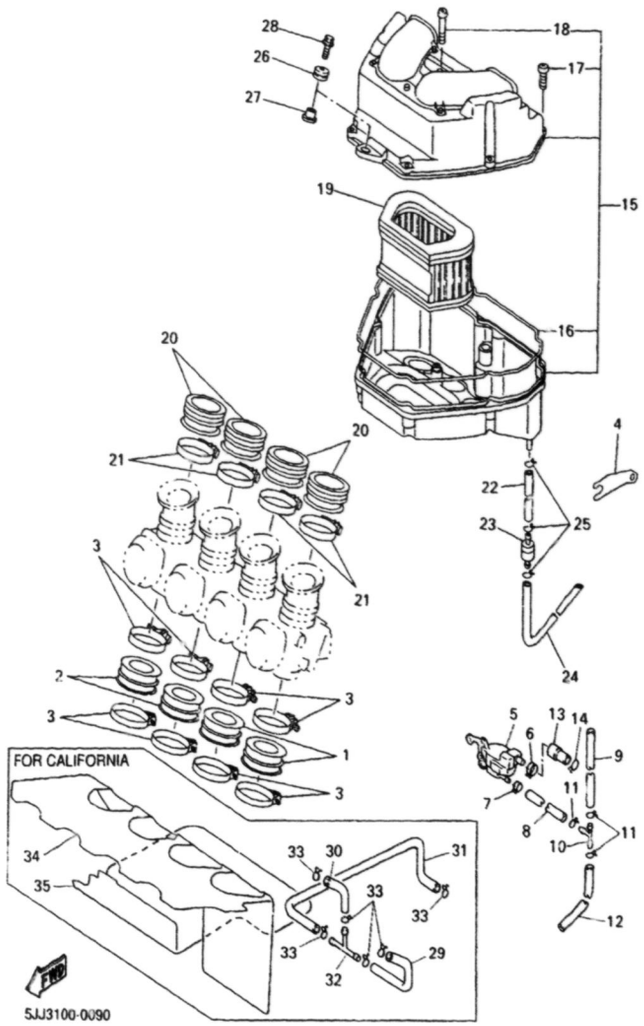

Ref. No.	Part Number	Description	Qty	Remarks
30	4XV-14466-00-00	PIPE	1	(5JJ4)
31	4XV-1443J-00-00	PIPE	1	(5JJ4)
32	90413-08012-00	WAY 3	1	(5JJ4)
33	90467-10008-00	CLIP	6	(5JJ4)
34	5JJ-12682-00-00	PROTECTOR, HEAT	1	(5JJ4)
35	5JJ-12683-00-00	PROTECTOR, HEAT	1	(5JJ4)

CONTENTS

AIR INDUCTION SYSTEM	B6
CAMSHAFT. CHAIN	A9
CARBURETOR	B7-8
CLUTCH	C2-3
COWLING 1	E12 ,F1
COWLING 2	F2-4
CRANKCASE	B10
CRANKCASE COVER 1	B11-12
CRANKSHAFT. PISTON	A6
CYLINDER	A5
ELECTRICAL 1	F12 ,G1
ELECTRICAL 2	G2-3
EXHAUST	B9
FENDER	C10-11
FLASHER LIGHT	F7
FRAME	C8-9
FRONT BRAKE CALIPER	D12
FRONT FORK	D5-6
FRONT MASTER CYLINDER	E5-6
FRONT WHEEL	D11
FUEL TANK	D7-9
GENERATOR	F5
HANDLE SWITCH. LEVER	F11
HEADLIGHT	F9
INTAKE	B4-5
METER	F8
OIL CLEANER	B3
OIL PUMP	B2
RADIATOR. HOSE	A12 ,B1
REAR ARM	D1-2
REAR BRAKE CALIPER	E3
REAR MASTER CYLINDER	E10-11
REAR SUSPENSION	D3
REAR WHEEL	E1-2
SEAT	D10
SHIFT CAM. FORK	C6
SHIFT SHAFT	C7
SIDE COVER	C12
STAND. FOOTREST	E7-9
STARTER	C1
STARTING MOTOR	F6
STEERING	D4
STEERING HANDLE. CABLE	E4
TAILLIGHT	F10
TRANSMISSION	C4-5
VALVE	A7-8
WATER PUMP	A10-11

AIR INDUCTION SYSTEM

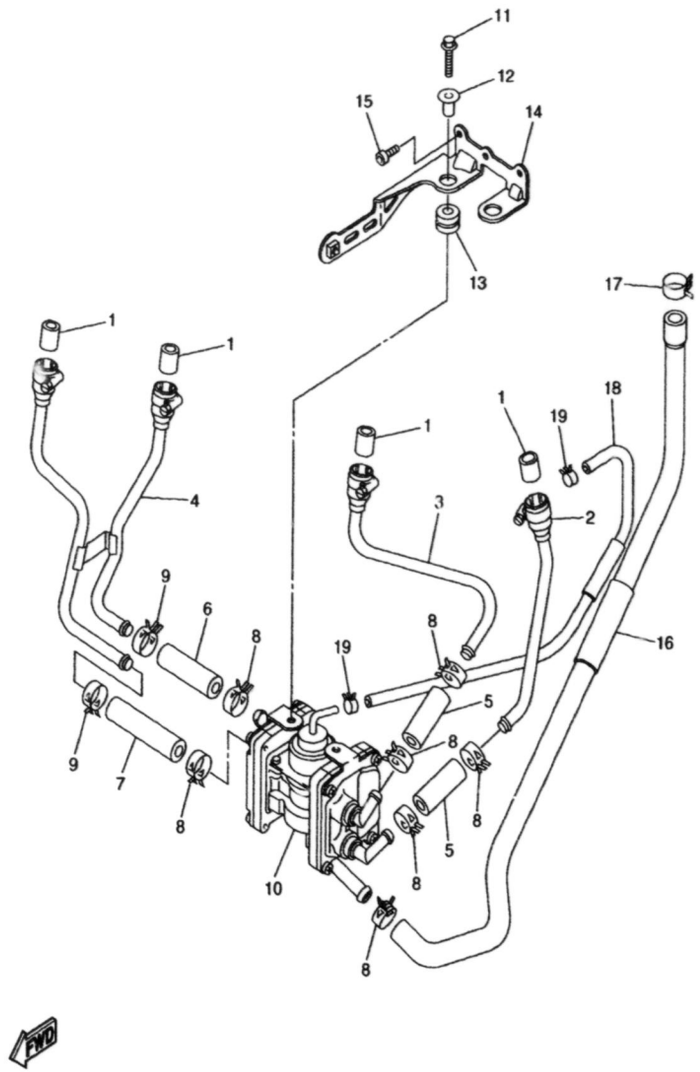

5JJ1300-0100

Ref. No.	Part Number	Description	Qty	Remarks
1	4KM-14714-01-00	GASKET, MUFFLER	4	
2	5JJ-14872-00-00	PIPE 2	1	
3	5JJ-14873-00-00	PIPE 3	1	
4	5JJ-14874-00-00	PIPE 4	1	
5	5JJ-14882-00-00	HOSE, BEND 2	2	
6	5JJ-14883-00-00	HOSE, BEND 3	1	
7	5JJ-14886-00-00	HOSE, BEND 6	1	
8	90467-15054-00	CLIP	7	
9	90467-15001-00	CLIP	2	
10	5JJ-14803-00-00	AIR INDUCTION SYSTEM ASSY	1	
11	95827-06020-00	BOLT, FLANGE	2	
12	90387-07391-00	COLLAR	2	
13	90480-15316-00	GROMMET	2	
14	5JJ-14867-00-00	BRACKET	1	
15	91317-06012-00	BOLT	3	
16	5JJ-14881-00-00	HOSE, BEND 1	1	
17	90467-17089-00	CLIP	1	
18	5JJ-14884-00-00	HOSE, BEND 4	1	
19	90467-08092-00	CLIP	2	

CONTENTS

AIR INDUCTION SYSTEM	B6
CAMSHAFT. CHAIN	A9
CARBURETOR	B7-8
CLUTCH	C2-3
COWLING 1	E12 ,F1
COWLING 2	F2-4
CRANKCASE	B10
CRANKCASE COVER 1	B11-12
CRANKSHAFT. PISTON	A6
CYLINDER	A5
ELECTRICAL 1	F12 ,G1
ELECTRICAL 2	G2-3
EXHAUST	B9
FENDER	C10-11
FLASHER LIGHT	F7
FRAME	C8-9
FRONT BRAKE CALIPER	D12
FRONT FORK	D5-6
FRONT MASTER CYLINDER	E5-6
FRONT WHEEL	D11
FUEL TANK	D7-9
GENERATOR	F5
HANDLE SWITCH. LEVER	F11
HEADLIGHT	F9
INTAKE	B4-5
METER	F8
OIL CLEANER	B3
OIL PUMP	B2
RADIATOR. HOSE	A12 ,B1
REAR ARM	D1-2
REAR BRAKE CALIPER	E3
REAR MASTER CYLINDER	E10-11
REAR SUSPENSION	D3
REAR WHEEL	E1-2
SEAT	D10
SHIFT CAM. FORK	C6
SHIFT SHAFT	C7
SIDE COVER	C12
STAND. FOOTREST	E7-9
STARTER	C1
STARTING MOTOR	F6
STEERING	D4
STEERING HANDLE. CABLE	E4
TAILLIGHT	F10
TRANSMISSION	C4-5
VALVE	A7-8
WATER PUMP	A10-11

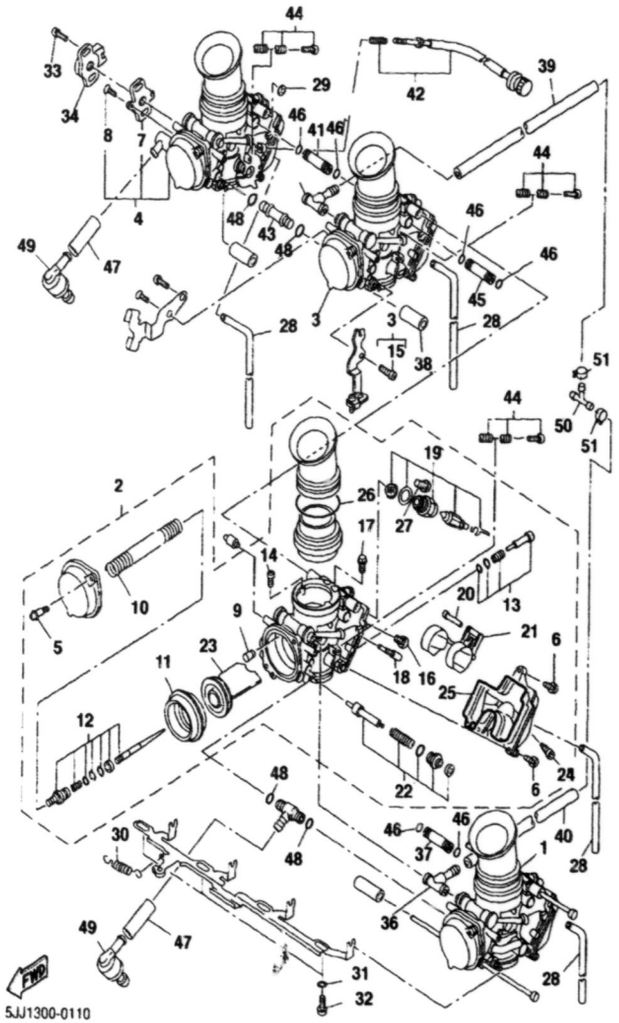

CARBURETOR

Ref. No.	Part Number	Description	Qty	Remarks
1	5JJ-14901-20-00	. CARBURETOR ASSY 1	1	(5JJ4)
	5JJ-14901-40-00	. CARBURETOR ASSY 1	1	()
2	5JJ-14902-20-00	. CARBURETOR ASSY 2	1	(5JJ4)
	5JJ-14902-40-00	. CARBURETOR ASSY 2	1	()
3	5JJ-14903-20-00	. CARBURETOR ASSY 3	1	(5JJ4)
	5JJ-14903-40-00	. CARBURETOR ASSY 3	1	()
4	5JJ-14904-20-00	. CARBURETOR ASSY 4	1	(5JJ4)
	5JJ-14904-40-00	. CARBURETOR ASSY 4	1	()
5	4KM-14216-00-00	.. SCREW	2	
6	98507-05012-00	.. SCREW, PAN HEAD	3	
7	4KG-14995-00-00	.. BRACKET	1	
8	98707-04008-00	.. SCREW, FLAT HEAD	2	
9	4SV-14968-00-00	.. CAP	1	
10	4SV-14933-00-00	.. SPRING, DIAPHRAGM	1	
11	4SV-24411-00-00	.. DIAPHRAGM	1	
12	4XV-1490J-30-00	.. NEEDLE SET	1	
13	4SV-14105-00-00	.. PILOT SCREW SET	1	
14	4SV-14216-00-00	.. SCREW	2	
15	98507-05010-00	.. SCREW, PAN HEAD	1	
16	3G2-14231-26-00	.. JET, MAIN (130)	1	
17	8CC-14232-24-00	.. JET, AIR (120)	1	
18	4KM-14142-15-00	.. JET, PILOT (15)	1	
19	4KM-14107-15-00	.. NEEDLE VALVE SET	1	
20	620-14186-00-00	.. PIN, FLOAT	1	
21	4SV-14985-00-00	.. FLOAT	1	
22	4SV-1410A-00-00	.. STARTER SET	1	
23	4SV-14112-00-00	.. VALVE, THROTTLE 1	1	
24	4KP-14191-00-00	.. PLUG, DRAIN	1	
25	4XV-14562-00-00	.. O-RING	1	

CONTINUED ON NEXT FRAME ➤

CONTENTS

AIR INDUCTION SYSTEM	B6
CAMSHAFT. CHAIN	A9
CARBURETOR	B7-8
CLUTCH	C2-3
COWLING 1	E12 ,F1
COWLING 2	F2-4
CRANKCASE	B10
CRANKCASE COVER 1	B11-12
CRANKSHAFT. PISTON	A6
CYLINDER	A5
ELECTRICAL 1	F12 ,G1
ELECTRICAL 2	G2-3
EXHAUST	B9
FENDER	C10-11
FLASHER LIGHT	F7
FRAME	C8-9
FRONT BRAKE CALIPER	D12
FRONT FORK	D5-6
FRONT MASTER CYLINDER	E5-6
FRONT WHEEL	D11
FUEL TANK	D7-9
GENERATOR	F5
HANDLE SWITCH. LEVER	F11
HEADLIGHT	F9
INTAKE	B4-5
METER	F8
OIL CLEANER	B3
OIL PUMP	B2
RADIATOR. HOSE	A12 ,B1
REAR ARM	D1-2
REAR BRAKE CALIPER	E3
REAR MASTER CYLINDER	E10-11
REAR SUSPENSION	D3
REAR WHEEL	E1-2
SEAT	D10
SHIFT CAM. FORK	C6
SHIFT SHAFT	C7
SIDE COVER	C12
STAND. FOOTREST	E7-9
STARTER	C1
STARTING MOTOR	F6
STEERING	D4
STEERING HANDLE. CABLE	E4
TAILLIGHT	F10
TRANSMISSION	C4-5
VALVE	A7-8
WATER PUMP	A10-11

CARBURETOR

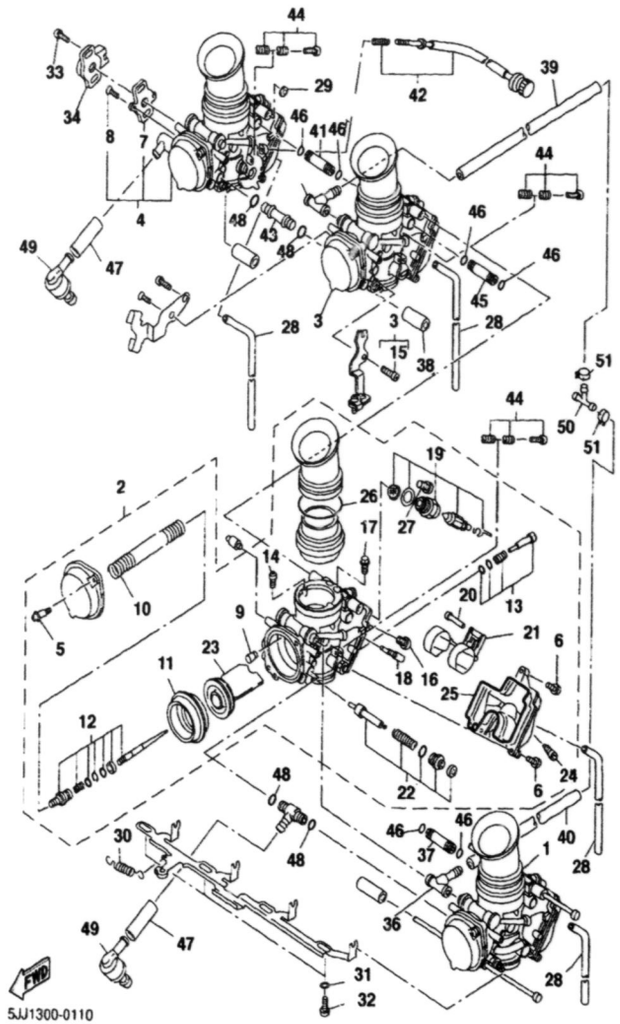

Ref. No.	Part Number	Description	Qty	Remarks
26	4XV-14275-00-00	.. SPRING	1	
27	1FN-14565-00-00	.. SCREW	1	
28	3JE-14197-00-00	. PIPE	4	
29	28V-14952-00-00	. WASHER	1	
30	4SV-14935-00-00	. SPRING	1	
31	4NK-14327-00-00	. PACKING	3	()
	4NK-14327-00-00	. PACKING	4	(5JJ4)
32	4XV-24453-00-00	. SCREW	3	()
	4XV-24453-00-00	. SCREW	4	(5JJ4)
33	4KM-24453-00-00	. SCREW	2	
34	4SV-85885-00-00	. THROTTLE POSITION SENSOR ASSY	1	
35	4SV-14987-00-00	. HOSE	1	
36	4XV-90445-00-00	. HOSE	1	
37	4XV-14149-30-00	. PIPE	1	
38	4XV-14149-60-00	. PIPE	1	
39	4YW-14987-00-00	. HOSE	1	
40	5JJ-14987-00-00	. HOSE	1	
41	4XV-14149-40-00	. PIPE	1	
42	4XV-14103-00-00	. THROTTLE SCREW SET	1	
43	4XV-14149-90-00	. PIPE	1	
44	3EN-1490K-00-00	. STOP SCREW SET	3	
45	4XV-14149-70-00	. PIPE	1	
46	36Y-14147-00-00	. O-RING	6	
47	3LN-14348-00-00	. PIPE 1	2	
48	3LN-1416A-00-00	. O-RING	4	
49	3LN-24515-00-00	. NET, FILTER 2	2	
50	90413-10016-00	. WAY 3	1	
51	90467-11090-00	. CLIP	2	

CONTENTS

AIR INDUCTION SYSTEM	B6
CAMSHAFT. CHAIN	A9
CARBURETOR	B7-8
CLUTCH	C2-3
COWLING 1	E12 ,F1
COWLING 2	F2-4
CRANKCASE	B10
CRANKCASE COVER 1	B11-12
CRANKSHAFT. PISTON	A6
CYLINDER	A5
ELECTRICAL 1	F12 ,G1
ELECTRICAL 2	G2-3
EXHAUST	B9
FENDER	C10-11
FLASHER LIGHT	F7
FRAME	C8-9
FRONT BRAKE CALIPER	D12
FRONT FORK	D5-6
FRONT MASTER CYLINDER	E5-6
FRONT WHEEL	D11
FUEL TANK	D7-9
GENERATOR	F5
HANDLE SWITCH. LEVER	F11
HEADLIGHT	F9
INTAKE	B4-5
METER	F8
OIL CLEANER	B3
OIL PUMP	B2
RADIATOR. HOSE	A12 ,B1
REAR ARM	D1-2
REAR BRAKE CALIPER	E3
REAR MASTER CYLINDER	E10-11
REAR SUSPENSION	D3
REAR WHEEL	E1-2
SEAT	D10
SHIFT CAM. FORK	C6
SHIFT SHAFT	C7
SIDE COVER	C12
STAND. FOOTREST	E7-9
STARTER	C1
STARTING MOTOR	F6
STEERING	D4
STEERING HANDLE. CABLE	E4
TAILLIGHT	F10
TRANSMISSION	C4-5
VALVE	A7-8
WATER PUMP	A10-11

EXHAUST

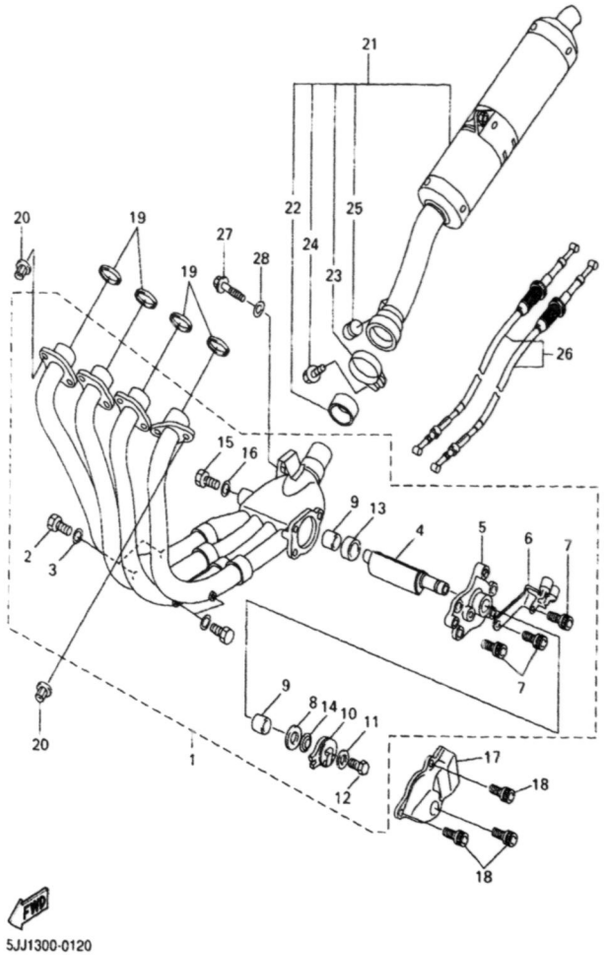

Ref. No.	Part Number	Description	Qty	Remarks
1	5JJ-14610-00-00	EXHAUST PIPE ASSY 1	1	
2	97080-06008-00	. BOLT	4	
3	92990-06600-00	. WASHER, PLATE	4	
4	4SV-14821-00-00	. ARM, SHAFT (VALVE)	1	
5	5JJ-14811-00-00	. HOUSING	1	
6	2TK-14867-01-00	. BRACKET	1	
7	90119-06115-00	. BOLT, WITH WASHER	3	
8	90201-106M5-00	. WASHER, PLATE	1	
9	4SV-14638-00-00	. COLLAR	2	
10	2TK-14865-01-00	. PULLEY	1	
11	90201-050T4-00	. WASHER, PLATE	1	
12	97080-05012-00	. BOLT	1	
13	90387-106U7-00	. COLLAR	1	
14	3GM-14683-00-00	. SPRING, HOOK	1	
15	91380-04006-00	. BOLT	2	
16	92990-04600-00	. WASHER, PLATE	2	
17	4HD-14826-00-00	PROTECTOR, EXHAUST	1	
18	90119-06187-00	BOLT, WITH WASHER	3	
19	4FM-14613-00-00	GASKET, EXHAUST PIPE	4	
20	90179-08410-00	NUT	8	
21	5JJ-14710-10-00	MUFFLER ASSY 1	1	
22	4XV-14714-00-00	. GASKET, MUFFLER	1	
23	5JJ-14715-00-00	. BAND, MUFFLER	1	
24	95817-08025-00	. BOLT, FLANGE	1	
25	4FM-24181-00-00	. DAMPER, LOCATING 1	1	
26	4XV-1130E-00-00	CABLE PULLEY ASSY	1	
27	95817-08040-00	BOLT, FLANGE	1	
28	90201-08612-00	WASHER, PLATE	1	

CONTENTS

AIR INDUCTION SYSTEM B6
CAMSHAFT. CHAIN A9
CARBURETOR B7-8
CLUTCH C2-3
COWLING 1 E12 ,F1
COWLING 2 F2-4
CRANKCASE B10
CRANKCASE COVER 1 B11-12
CRANKSHAFT. PISTON A6
CYLINDER A5
ELECTRICAL 1 F12 ,G1
ELECTRICAL 2 G2-3
EXHAUST B9
FENDER C10-11
FLASHER LIGHT F7
FRAME C8-9
FRONT BRAKE CALIPER D12
FRONT FORK D5-6
FRONT MASTER CYLINDER E5-6
FRONT WHEEL D11
FUEL TANK D7-9
GENERATOR F5
HANDLE SWITCH. LEVER F11
HEADLIGHT F9
INTAKE B4-5
METER F8
OIL CLEANER B3
OIL PUMP B2
RADIATOR. HOSE A12 ,B1
REAR ARM D1-2
REAR BRAKE CALIPER E3
REAR MASTER CYLINDER E10-11
REAR SUSPENSION D3
REAR WHEEL E1-2
SEAT D10
SHIFT CAM. FORK C6
SHIFT SHAFT C7
SIDE COVER C12
STAND. FOOTREST E7-9
STARTER C1
STARTING MOTOR F6
STEERING D4
STEERING HANDLE. CABLE E4
TAILLIGHT F10
TRANSMISSION C4-5
VALVE A7-8
WATER PUMP A10-11

CRANKCASE

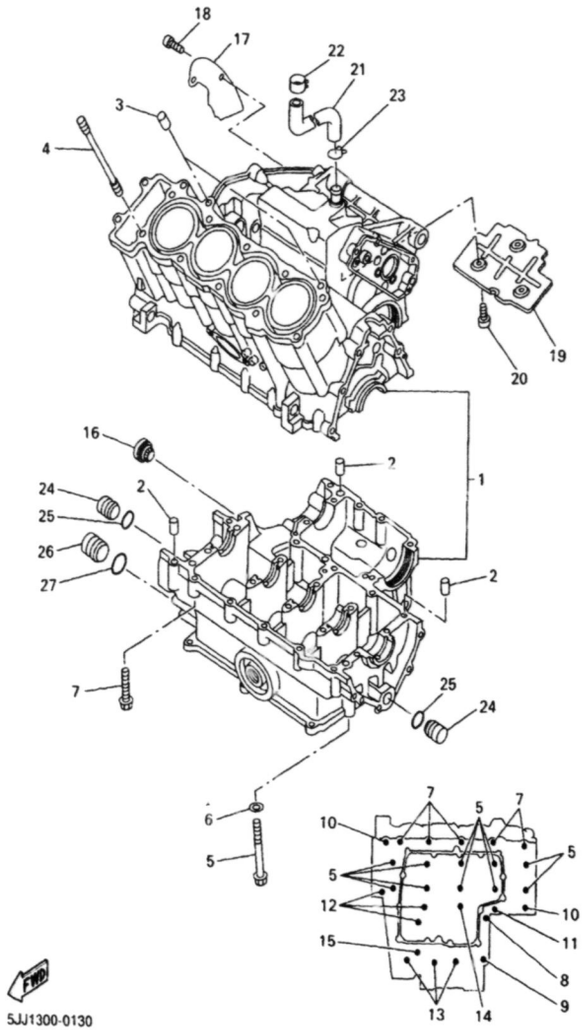

Ref. No.	Part Number	Description	Qty	Remarks
1	5JJ-15100-00-00	CRANKCASE ASSY	1	
2	99530-10014-00	PIN, DOWEL	3	
3	99530-10114-00	PIN, DOWEL	2	
4	90116-10619-00	BOLT, STUD	10	
5	90105-093A5-00	BOLT, WASHER BASED	10	
6	90201-096J9-00	WASHER, PLATE	10	
7	95817-06055-00	BOLT, FLANGE	5	
8	90105-08015-00	BOLT, WASHER BASED	1	
9	95817-08050-00	BOLT, FLANGE	1	
10	90109-065G3-00	BOLT	2	
11	95817-06060-00	BOLT, FLANGE	1	
12	95817-06070-00	BOLT, FLANGE	3	
13	95817-06045-00	BOLT, FLANGE	3	
14	95814-06050-00	BOLT, FLANGE	1	
15	95817-06065-00	BOLT, FLANGE	1	
16	2H7-15361-00-00	GAUGE, LEVEL	1	
17	4XV-11165-00-00	PLATE, BREATHER	1	
18	91317-06012-00	BOLT	2	
19	4XV-11145-00-00	PLATE, BREATHER 2	1	
20	91317-06012-00	BOLT	3	
21	90445-161K7-00	HOSE (L215)	1	
22	90468-08104-00	CLIP	1	
23	90467-14015-00	CLIP	1	
24	90338-16262-00	PLUG	2	
25	93210-12790-00	O-RING	2	
26	90338-20263-00	PLUG	1	
27	93210-16314-00	O-RING	1	

CONTENTS

AIR INDUCTION SYSTEM	B6
CAMSHAFT. CHAIN	A9
CARBURETOR	B7-8
CLUTCH	C2-3
COWLING 1	E12 ,F1
COWLING 2	F2-4
CRANKCASE	B10
CRANKCASE COVER 1	B11-12
CRANKSHAFT. PISTON	A6
CYLINDER	A5
ELECTRICAL 1	F12 ,G1
ELECTRICAL 2	G2-3
EXHAUST	B9
FENDER	C10-11
FLASHER LIGHT	F7
FRAME	C8-9
FRONT BRAKE CALIPER	D12
FRONT FORK	D5-6
FRONT MASTER CYLINDER	E5-6
FRONT WHEEL	D11
FUEL TANK	D7-9
GENERATOR	F5
HANDLE SWTCH. LEVER	F11
HEADLIGHT	F9
INTAKE	B4-5
METER	F8
OIL CLEANER	B3
OIL PUMP	B2
RADIATOR. HOSE	A12 ,B1
REAR ARM	D1-2
REAR BRAKE CALIPER	E3
REAR MASTER CYLINDER	E10-11
REAR SUSPENSION	D3
REAR WHEEL	E1-2
SEAT	D10
SHIFT CAM. FORK	C6
SHIFT SHAFT	C7
SIDE COVER	C12
STAND. FOOTREST	E7-9
STARTER	C1
STARTING MOTOR	F6
STEERING	D4
STEERING HANDLE. CABLE	E4
TAILLIGHT	F10
TRANSMISSION	C4-5
VALVE	A7-8
WATER PUMP	A10-11

CRANKCASE COVER 1

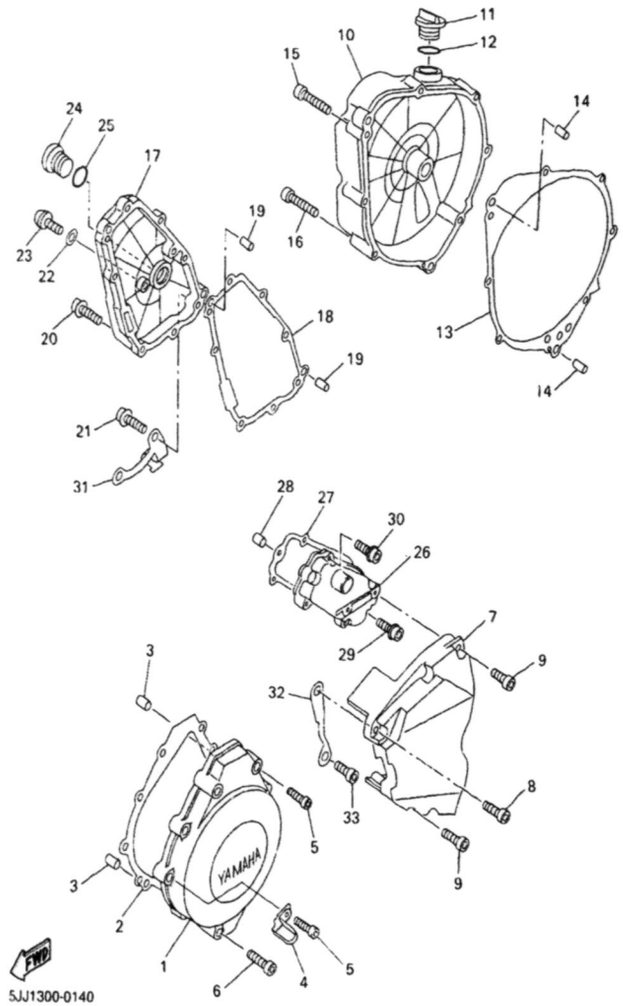

Ref. No.	Part Number	Description	Qty	Remarks
1	4XV-15411-00-00	COVER, CRANKCASE 1	1	
2	4XV-15451-00-00	GASKET, CRANKCASE COVER 1	1	
3	99530-08012-00	PIN, DOWEL	2	
4	90461-10003-00	CLAMP	1	
5	91314-06035-00	BOLT	8	
6	91314-06020-00	BOLT	1	
7	4XV-15418-00-00	COVER, CHAIN CASE	1	
8	90110-06224-00	BOLT, HEXAGON SOCKET HEAD	1	
9	91314-06025-00	BOLT	4	
10	4XV-15421-00-00	COVER, CRANKCASE 2	1	
11	3F9-15362-00-00	PLUG, OIL LEVEL	1	
12	93210-27194-00	O-RING	1	
13	4XV-15461-00-00	GASKET, CRANKCASE COVER 2	1	
14	90250-08022-00	PIN, STRAIGHT	2	
15	91314-06040-00	BOLT	5	
16	91314-06050-00	BOLT	3	
17	5JJ-15416-00-00	COVER, OIL PUMP	1	
18	5JJ-15456-00-00	GASKET, OIL PUMP COVER 1	1	
19	99530-08012-00	PIN, DOWEL	2	
20	90109-06014-00	BOLT	4	
21	90109-06015-00	BOLT	4	
22	90430-08143-00	GASKET	1	
23	92014-08016-00	BOLT, BUTTON HEAD	1	
24	90340-32116-00	PLUG, STRAIGHT SCREW	1	
25	93210-32172-00	O-RING	1	
26	5JJ-15425-00-00	COVER, GENERATOR 2	1	
27	5JJ-15463-00-00	GASKET, CARBURETOR COVER 2	1	

CONTINUED ON NEXT FRAME ➤

CONTENTS

AIR INDUCTION SYSTEM	B6
CAMSHAFT. CHAIN	A9
CARBURETOR	B7-8
CLUTCH	C2-3
COWLING 1	E12 ,F1
COWLING 2	F2-4
CRANKCASE	B10
CRANKCASE COVER 1	B11-12
CRANKSHAFT. PISTON	A6
CYLINDER	A5
ELECTRICAL 1	F12 ,G1
ELECTRICAL 2	G2-3
EXHAUST	B9
FENDER	C10-11
FLASHER LIGHT	F7
FRAME	C8-9
FRONT BRAKE CALIPER	D12
FRONT FORK	D5-6
FRONT MASTER CYLINDER	E5-6
FRONT WHEEL	D11
FUEL TANK	D7-9
GENERATOR	F5
HANDLE SWITCH. LEVER	F11
HEADLIGHT	F9
INTAKE	B4-5
METER	F8
OIL CLEANER	B3
OIL PUMP	B2
RADIATOR. HOSE	A12 ,B1
REAR ARM	D1-2
REAR BRAKE CALIPER	E3
REAR MASTER CYLINDER	E10-11
REAR SUSPENSION	D3
REAR WHEEL	E1-2
SEAT	D10
SHIFT CAM. FORK	C6
SHIFT SHAFT	C7
SIDE COVER	C12
STAND. FOOTREST	E7-9
STARTER	C1
STARTING MOTOR	F6
STEERING	D4
STEERING HANDLE. CABLE	E4
TAILLIGHT	F10
TRANSMISSION	C4-5
VALVE	A7-8
WATER PUMP	A10-11

CRANKCASE COVER 1

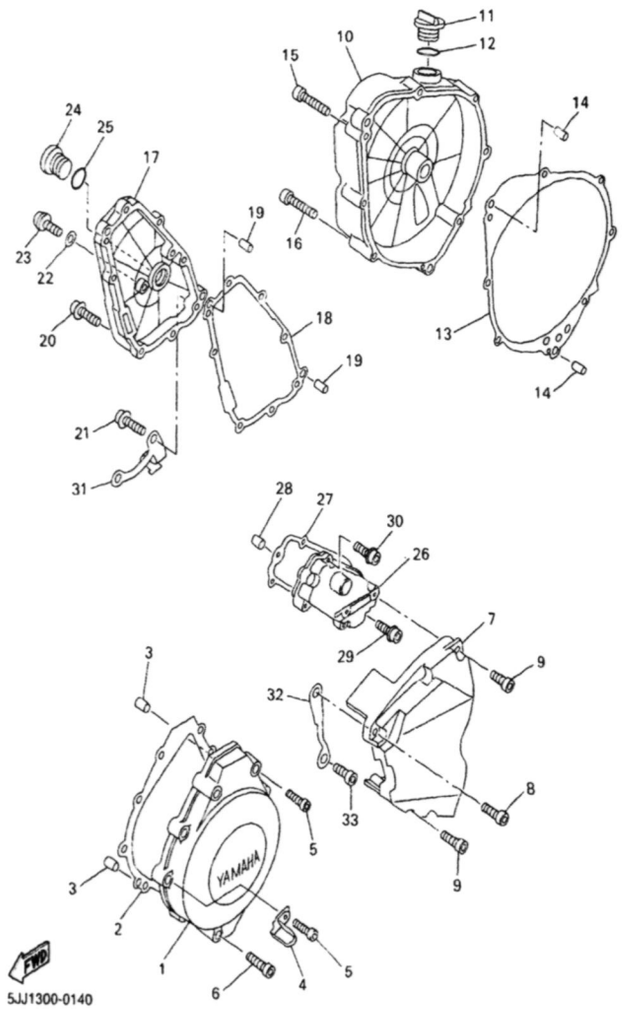

Ref. No.	Part Number	Description	Qty	Remarks
28	99530-08012-00	PIN, DOWEL	2	
29	90109-06014-00	BOLT	2	
30	90109-06015-00	BOLT	3	
31	4XV-15441-00-00	HOLDER, CLUTCH CABLE	1	
32	4XV-15113-00-00	PLATE	1	
33	90110-06136-00	BOLT, HEXAGON SOCKET HEAD	1	

CONTENTS

AIR INDUCTION SYSTEM	B6
CAMSHAFT. CHAIN	A9
CARBURETOR	B7-8
CLUTCH	C2-3
COWLING 1	E12 ,F1
COWLING 2	F2-4
CRANKCASE	B10
CRANKCASE COVER 1	B11-12
CRANKSHAFT. PISTON	A6
CYLINDER	A5
ELECTRICAL 1	F12 ,G1
ELECTRICAL 2	G2-3
EXHAUST	B9
FENDER	C10-11
FLASHER LIGHT	F7
FRAME	C8-9
FRONT BRAKE CALIPER	D12
FRONT FORK	D5-6
FRONT MASTER CYLINDER	E5-6
FRONT WHEEL	D11
FUEL TANK	D7-9
GENERATOR	F5
HANDLE SWITCH. LEVER	F11
HEADLIGHT	F9
INTAKE	B4-5
METER	F8
OIL CLEANER	B3
OIL PUMP	B2
RADIATOR. HOSE	A12 ,B1
REAR ARM	D1-2
REAR BRAKE CALIPER	E3
REAR MASTER CYLINDER	E10-11
REAR SUSPENSION	D3
REAR WHEEL	E1-2
SEAT	D10
SHIFT CAM. FORK	C6
SHIFT SHAFT	C7
SIDE COVER	C12
STAND. FOOTREST	E7-9
STARTER	C1
STARTING MOTOR	F6
STEERING	D4
STEERING HANDLE. CABLE	E4
TAILLIGHT	F10
TRANSMISSION	C4-5
VALVE	A7-8
WATER PUMP	A10-11

STARTER

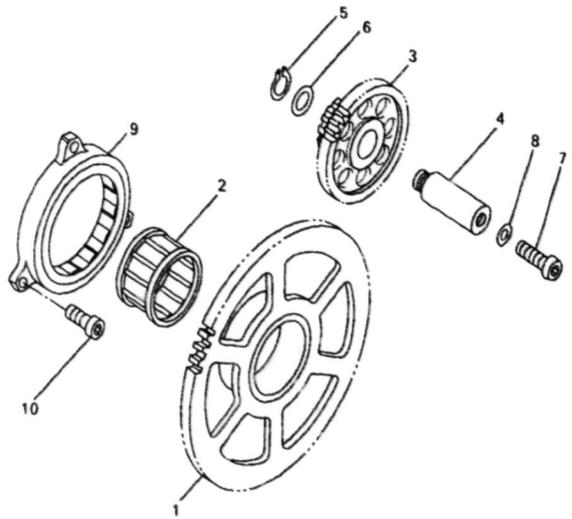

5JJ1300-0150

Ref. No.	Part Number	Description	Qty	Remarks
1	5JJ-15515-00-00	GEAR 3	1	
2	93310-338S6-00	BEARING	1	
3	5JJ-15517-00-00	GEAR, IDLER 2	1	
4	4XV-15521-00-00	SHAFT 1	1	
5	93410-08072-00	CIRCLIP	1	
6	90201-08089-00	WASHER, PLATE	1	
7	92017-06014-00	BOLT, BUTTON HEAD	1	
8	90430-06014-00	GASKET	1	
9	4XV-15570-00-00	STARTER CLUTCH ASSY	1	
10	91317-06010-00	BOLT	3	

CONTENTS

AIR INDUCTION SYSTEM	B6
CAMSHAFT. CHAIN	A9
CARBURETOR	B7-8
CLUTCH	C2-3
COWLING 1	E12 ,F1
COWLING 2	F2-4
CRANKCASE	B10
CRANKCASE COVER 1	B11-12
CRANKSHAFT. PISTON	A6
CYLINDER	A5
ELECTRICAL 1	F12 ,G1
ELECTRICAL 2	G2-3
EXHAUST	B9
FENDER	C10-11
FLASHER LIGHT	F7
FRAME	C8-9
FRONT BRAKE CALIPER	D12
FRONT FORK	D5-6
FRONT MASTER CYLINDER	E5-6
FRONT WHEEL	D11
FUEL TANK	D7-9
GENERATOR	F5
HANDLE SWITCH. LEVER	F11
HEADLIGHT	F9
INTAKE	B4-5
METER	F8
OIL CLEANER	B3
OIL PUMP	B2
RADIATOR. HOSE	A12 ,B1
REAR ARM	D1-2
REAR BRAKE CALIPER	E3
REAR MASTER CYLINDER	E10-11
REAR SUSPENSION	D3
REAR WHEEL	E1-2
SEAT	D10
SHIFT CAM. FORK	C6
SHIFT SHAFT	C7
SIDE COVER	C12
STAND. FOOTREST	E7-9
STARTER	C1
STARTING MOTOR	F6
STEERING	D4
STEERING HANDLE. CABLE	E4
TAILLIGHT	F10
TRANSMISSION	C4-5
VALVE	A7-8
WATER PUMP	A10-11

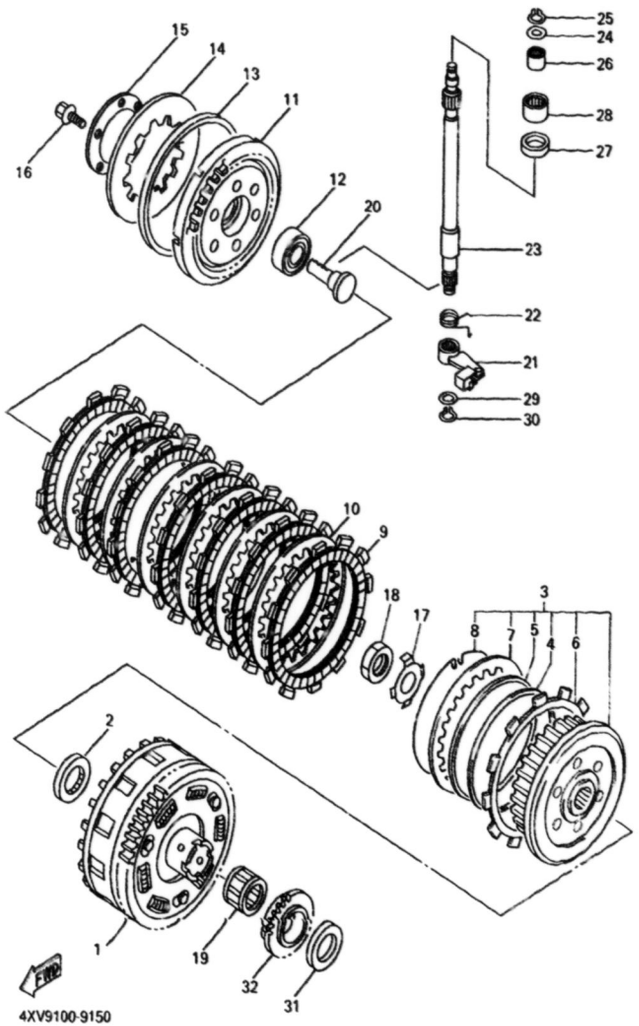

CLUTCH

Ref. No.	Part Number	Description	Qty	Remarks
1	4XV-16150-02-00	PRIMARY DRIVEN GEAR COMP.	1	
2	26H-16154-00-00	PLATE, THRUST 1	1	
3	4XV-16370-00-00	CLUTCH BOSS ASSY	1	
4	4XV-16384-00-00	. PLATE, SEAT	1	
5	36Y-16383-00-00	. SPRING, CLUTCH BOSS	1	
6	4XV-16331-00-00	. PLATE, FRICTION 2	1	
7	2H7-16325-00-00	. PLATE, CLUTCH 2	1	
8	2H7-16385-00-00	. RING, CLUTCH BOSS	1	
9	341-16321-13-00	PLATE, FRICTION	7	
10	2H7-16325-00-00	PLATE, CLUTCH 2	6	
11	4XV-16351-00-00	PLATE, PRESSURE 1	1	
12	93306-00304-00	BEARING (B6003C4)	1	
13	36Y-16335-00-00	HOUSING, SPRING	1	
14	36Y-16334-00-00	SPRING, CLUTCH 2	1	
15	1TX-16352-00-00	PLATE, PRESSURE 2	1	
16	95817-06025-00	BOLT, FLANGE	6	
17	90015-25218-00	WASHER, LOCK	1	
18	90170-20323-00	NUT	1	
19	93310-228S5-00	BEARING	1	
20	4XV-16356-01-00	ROD, PUSH 1	1	
21	4XV-16340-00-00	PUSH LEVER ASSY	1	
22	90508-164B2-00	SPRING, TORSION	1	
23	4XV-16382-00-00	AXLE, PUSH LEVER	1	
24	92907-08600-00	WASHER, PLATE	1	
25	99001-07600-00	CIRCLIP	1	
26	93317-11020-00	BEARING	1	
27	93102-15212-00	OIL SEAL	1	
28	93315-31502-00	BEARING	1	

CONTINUED ON NEXT FRAME ➤

CONTENTS

AIR INDUCTION SYSTEM	B6
CAMSHAFT, CHAIN	A9
CARBURETOR	B7-8
CLUTCH	C2-3
COWLING 1	E12 ,F1
COWLING 2	F2-4
CRANKCASE	B10
CRANKCASE COVER 1	B11-12
CRANKSHAFT, PISTON	A6
CYLINDER	A5
ELECTRICAL 1	F12 ,G1
ELECTRICAL 2	G2-5
EXHAUST	B9
FENDER	C10-11
FLASHER LIGHT	F7
FRAME	C8-9
FRONT BRAKE CALIPER	D12
FRONT FORK	D5-6
FRONT MASTER CYLINDER	E5-6
FRONT WHEEL	D11
FUEL TANK	D7-9
GENERATOR	F5
HANDLE SWITCH, LEVER	F11
HEADLIGHT	F9
INTAKE	B4-5
METER	F8
OIL CLEANER	B3
OIL PUMP	B2
RADIATOR, HOSE	A12 ,B1
REAR ARM	D1-2
REAR BRAKE CALIPER	E3
REAR MASTER CYLINDER	E10-11
REAR SUSPENSION	D3
REAR WHEEL	E1-2
SEAT	D10
SHIFT CAM, FORK	C6
SHIFT SHAFT	C7
SIDE COVER	C12
STAND, FOOTREST	E7-9
STARTER	C1
STARTING MOTOR	F6
STEERING	D4
STEERING HANDLE, CABLE	E4
TAILLIGHT	F10
TRANSMISSION	C4-5
VALVE	A7-8
WATER PUMP	A10-11

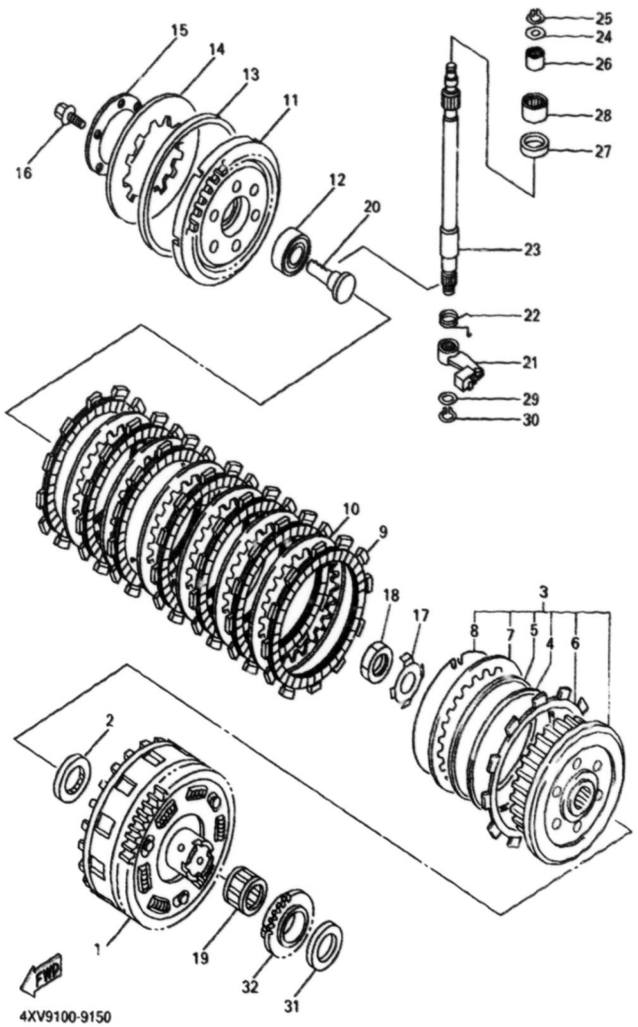

CLUTCH

Ref. No.	Part Number	Description	Qty	Remarks
29	90201-10614-00	WASHER, PLATE	1	
30	99009-10400-00	CIRCLIP	1	
31	4XV-16154-00-00	PLATE, THRUST 1	1	
32	4XV-13354-00-00	SPROCKET, DRIVE	1	

CONTENTS

AIR INDUCTION SYSTEM	B6
CAMSHAFT, CHAIN	A9
CARBURETOR	B7-8
CLUTCH	C2-3
COWLING 1	E12 ,F1
COWLING 2	F2-4
CRANKCASE	B10
CRANKCASE COVER 1	B11-12
CRANKSHAFT, PISTON	A6
CYLINDER	A5
ELECTRICAL 1	F12 ,G1
ELECTRICAL 2	G2-3
EXHAUST	B9
FENDER	C10-11
FLASHER LIGHT	F7
FRAME	C8-9
FRONT BRAKE CALIPER	D12
FRONT FORK	D5-6
FRONT MASTER CYLINDER	E5-6
FRONT WHEEL	D11
FUEL TANK	D7-9
GENERATOR	F5
HANDLE SWITCH, LEVER	F11
HEADLIGHT	F9
INTAKE	B4-5
METER	F8
OIL CLEANER	B3
OIL PUMP	B2
RADIATOR, HOSE	A12 ,B1
REAR ARM	D1-2
REAR BRAKE CALIPER	E3
REAR MASTER CYLINDER	E10-11
REAR SUSPENSION	D3
REAR WHEEL	E1-2
SEAT	D10
SHIFT CAM, FORK	C6
SHIFT SHAFT	C7
SIDE COVER	C12
STAND, FOOTREST	E7-9
STARTER	C1
STARTING MOTOR	F6
STEERING	D4
STEERING HANDLE, CABLE	E4
TAILLIGHT	F10
TRANSMISSION	C4-5
VALVE	A7-8
WATER PUMP	A10-11

TRANSMISSION

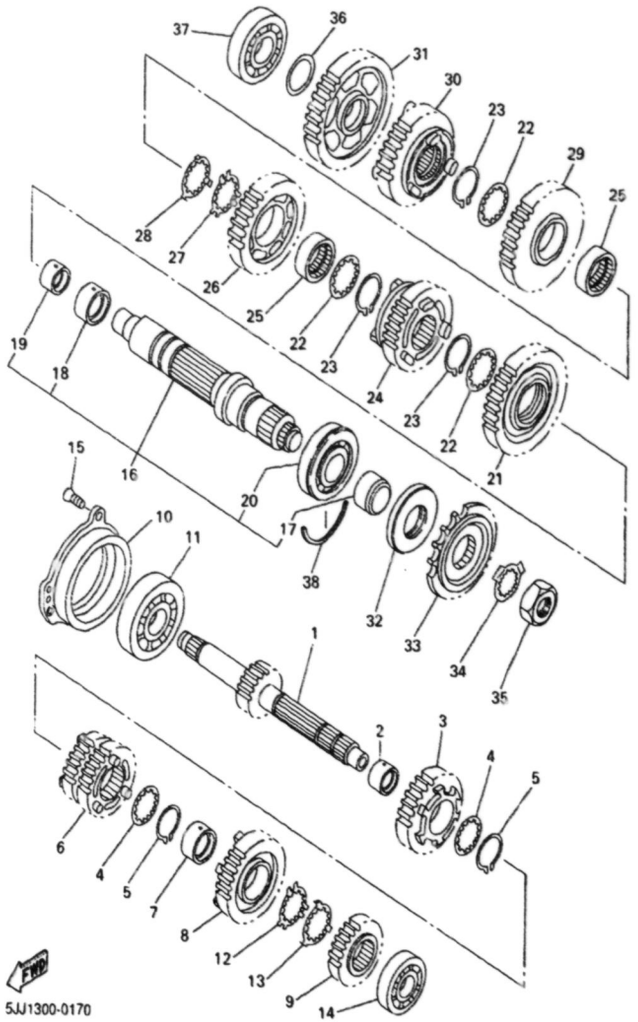

Ref. No.	Part Number	Description	Qty	Remarks
1	5JJ-17411-00-00	AXLE, MAIN	1	
2	90387-2811B-00	COLLAR	1	
3	5JJ-17151-00-00	GEAR, 5TH PINION	1	
4	90209-25342-00	WASHER	2	
5	93440-28062-00	CIRCLIP	2	
6	5JJ-17131-00-00	GEAR, 3RD PINION	1	
7	90387-2810U-00	COLLAR	1	
8	5JJ-17161-00-00	GEAR, 6TH PINION	1	
9	5JJ-17121-00-00	GEAR, 2ND PINION	1	
10	5JJ-15163-00-00	HOUSING, BEARING 1	1	
11	93306-37807-00	BEARING	1	
12	90209-25349-00	WASHER	1	
13	90209-25350-00	WASHER	1	
14	93306-27208-00	BEARING	1	
15	90149-06286-00	SCREW	3	
16	5JJ-17402-00-00	DRIVE AXLE ASSY	1	
17	5JJ-17158-00-00	. COLLAR 1	1	
18	90387-3311C-00	. COLLAR	1	
19	90387-2511A-00	. COLLAR	1	
20	93306-20705-00	. BEARING (B6207N)	1	
21	5JJ-17221-00-00	GEAR, 2ND WHEEL	1	
22	90209-30344-00	WASHER	3	
23	93440-32063-00	CIRCLIP	3	
24	5JJ-17261-00-00	GEAR, 6TH WHEEL	1	
25	90387-3310V-00	COLLAR	2	
26	5JJ-17241-00-00	GEAR, 4TH WHEEL	1	
27	90209-30345-00	WASHER	1	
28	90209-30343-00	WASHER	1	
29	5JJ-17231-00-00	GEAR, 3RD WHEEL	1	

CONTINUED ON NEXT FRAME ➤

CONTENTS

AIR INDUCTION SYSTEM	B6
CAMSHAFT. CHAIN	A9
CARBURETOR	B7-8
CLUTCH	C2-3
COWLING 1	E12 ,F1
COWLING 2	F2-4
CRANKCASE	B10
CRANKCASE COVER 1	B11-12
CRANKSHAFT. PISTON	A6
CYLINDER	A5
ELECTRICAL 1	F12 ,G1
ELECTRICAL 2	G2-3
EXHAUST	B9
FENDER	C10-11
FLASHER LIGHT	F7
FRAME	C8-9
FRONT BRAKE CALIPER	D12
FRONT FORK	D5-6
FRONT MASTER CYLINDER	E5-6
FRONT WHEEL	D11
FUEL TANK	D7-9
GENERATOR	F5
HANDLE SWITCH. LEVER	F11
HEADLIGHT	F9
INTAKE	B4-5
METER	F8
OIL CLEANER	B3
OIL PUMP	B2
RADIATOR. HOSE	A12 ,B1
REAR ARM	D1-2
REAR BRAKE CALIPER	E3
REAR MASTER CYLINDER	E10-11
REAR SUSPENSION	D3
REAR WHEEL	E1-2
SEAT	D10
SHIFT CAM. FORK	C6
SHIFT SHAFT	C7
SIDE COVER	C12
STAND. FOOTREST	E7-9
STARTER	C1
STARTING MOTOR	F6
STEERING	D4
STEERING HANDLE. CABLE	E4
TAILLIGHT	F10
TRANSMISSION	C4-5
VALVE	A7-8
WATER PUMP	A10-11

TRANSMISSION

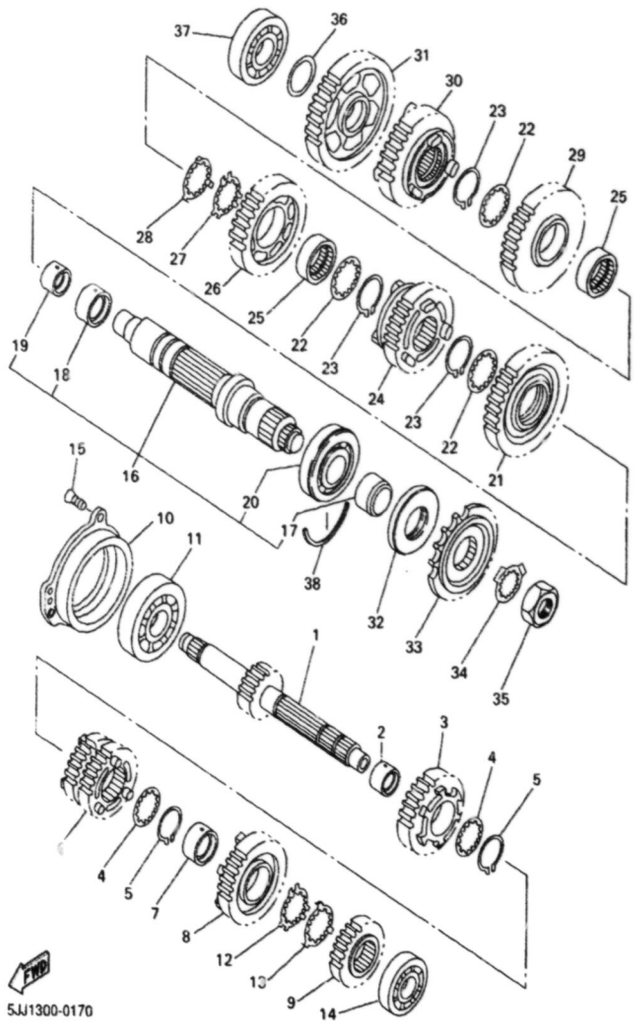

Ref. No.	Part Number	Description	Qty	Remarks
30	5JJ-17251-00-00	GEAR, 5TH WHEEL	1	
31	5JJ-17211-00-00	GEAR, 1ST WHEEL	1	
32	93102-45465-00	OIL SEAL	1	
33	4XV-17460-00-00	SPROCKET, DRIVE	1	
34	90215-30233-00	WASHER, LOCK	1	
35	90179-22063-00	NUT	1	
36	90201-224L4-00	WASHER, PLATE	1	
37	93306-37209-00	BEARING	1	
38	93440-72049-00	CIRCLIP	1	

CONTENTS

AIR INDUCTION SYSTEM	B6
CAMSHAFT. CHAIN	A9
CARBURETOR	B7-8
CLUTCH	C2-3
COWLING 1	E12 ,F1
COWLING 2	F2-4
CRANKCASE	B10
CRANKCASE COVER 1	B11-12
CRANKSHAFT. PISTON	A6
CYLINDER	A5
ELECTRICAL 1	F12 ,G1
ELECTRICAL 2	G2-3
EXHAUST	B9
FENDER	C10-11
FLASHER LIGHT	F7
FRAME	C8-9
FRONT BRAKE CALIPER	D12
FRONT FORK	D5-6
FRONT MASTER CYLINDER	E5-6
FRONT WHEEL	D11
FUEL TANK	D7-9
GENERATOR	F5
HANDLE SWITCH. LEVER	F11
HEADLIGHT	F9
INTAKE	B4-5
METER	F8
OIL CLEANER	B3
OIL PUMP	B2
RADIATOR. HOSE	A12 ,B1
REAR ARM	D1-2
REAR BRAKE CALIPER	E3
REAR MASTER CYLINDER	E10-11
REAR SUSPENSION	D3
REAR WHEEL	E1-2
SEAT	D10
SHIFT CAM. FORK	C6
SHIFT SHAFT	C7
SIDE COVER	C12
STAND. FOOTREST	E7-9
STARTER	C1
STARTING MOTOR	F6
STEERING	D4
STEERING HANDLE. CABLE	E4
TAILLIGHT	F10
TRANSMISSION	C4-5
VALVE	A7-8
WATER PUMP	A10-11

SHIFT CAM. FORK

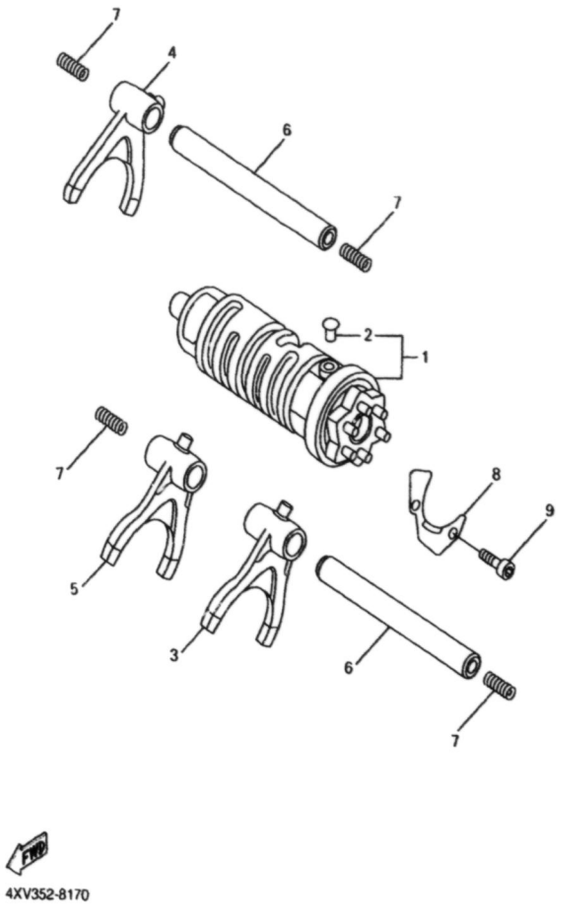

Ref. No.	Part Number	Description	Qty	Remarks
1	4XV-18540-00-00	SHIFT CAM ASSY	1	
2	136-18542-00-00	. POINT, NEUTRAL	1	
3	4XV-18511-00-00	FORK, SHIFT 1	1	
4	5JJ-18512-00-00	FORK, SHIFT 2	1	
5	4XV-18513-00-00	FORK, SHIFT 3	1	
6	4XV-18531-00-00	BAR, SHIFT FORK GUIDE 1	2	
7	90501-064L1-00	SPRING, COMPRESSION	4	
8	4XV-18536-00-00	STOPPER, SHIFT BAR	1	
9	90110-06226-00	BOLT, HEXAGON SOCKET HEAD	2	

CONTENTS

AIR INDUCTION SYSTEM	B6
CAMSHAFT. CHAIN	A9
CARBURETOR	B7-8
CLUTCH	C2-3
COWLING 1	E12 ,F1
COWLING 2	F2-4
CRANKCASE	B10
CRANKCASE COVER 1	B11-12
CRANKSHAFT. PISTON	A6
CYLINDER	A5
ELECTRICAL 1	F12 ,G1
ELECTRICAL 2	G2-3
EXHAUST	B9
FENDER	C10-11
FLASHER LIGHT	F7
FRAME	C8-9
FRONT BRAKE CALIPER	D12
FRONT FORK	D5-6
FRONT MASTER CYLINDER	E5-6
FRONT WHEEL	D11
FUEL TANK	D7-9
GENERATOR	F5
HANDLE SWITCH. LEVER	F11
HEADLIGHT	F9
INTAKE	B4-5
METER	F8
OIL CLEANER	B3
OIL PUMP	B2
RADIATOR. HOSE	A12 ,B1
REAR ARM	D1-2
REAR BRAKE CALIPER	E3
REAR MASTER CYLINDER	E10-11
REAR SUSPENSION	D3
REAR WHEEL	E1-2
SEAT	D10
SHIFT CAM. FORK	C6
SHIFT SHAFT	C7
SIDE COVER	C12
STAND. FOOTREST	E7-9
STARTER	C1
STARTING MOTOR	F6
STEERING	D4
STEERING HANDLE. CABLE	E4
TAILLIGHT	F10
TRANSMISSION	C4-5
VALVE	A7-8
WATER PUMP	A10-11

SHIFT SHAFT

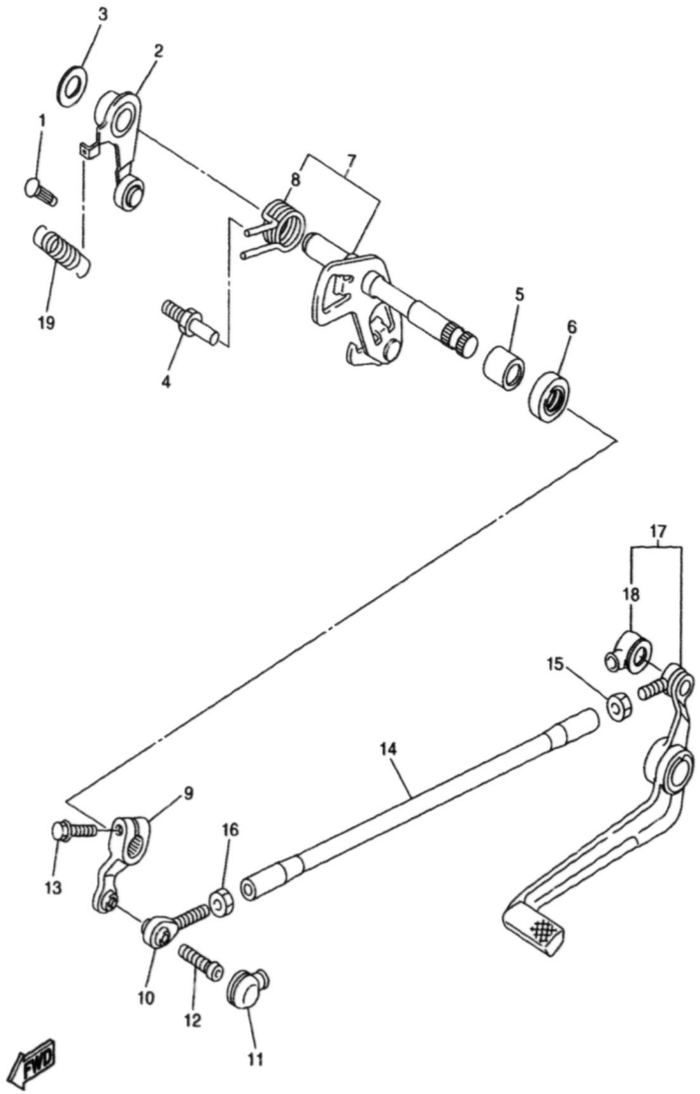

5JJ1300-0190

Ref. No.	Part Number	Description	Qty	Remarks
1	132-16346-00-00	HOOK, SPRING	1	
2	5JJ-18140-00-00	STOPPER LEVER ASSY	1	
3	90201-120K4-00	WASHER, PLATE	1	
4	4XV-18127-00-00	STOPPER, SCREW	1	
5	93315-11206-00	BEARING	1	
6	93101-12004-00	OIL SEAL	1	
7	5JJ-18101-00-00	SHIFT SHAFT ASSY	1	
8	90508-29012-00	. SPRING, TORSION	1	
9	5JJ-18112-00-00	ARM, SHIFT	1	
10	5JJ-18116-00-00	JOINT, ROD 1	1	
11	4XV-18154-00-00	COVER, DUST	1	
12	90111-06019-00	BOLT	1	
13	95824-06020-00	BOLT, FLANGE	1	
14	4XV-18115-00-00	ROD, SHIFT	1	
15	90170-06228-00	NUT (COUNTER CLOCKWISE)	1	
16	95304-06700-00	NUT	1	
17	5JJ-18110-00-00	SHIFT PEDAL ASSY	1	
18	4XV-18154-00-00	. COVER, DUST	1	
19	90506-14002-00	SPRING, TENSION	1	

CONTENTS

AIR INDUCTION SYSTEM	B6
CAMSHAFT. CHAIN	A9
CARBURETOR	B7-8
CLUTCH	C2-3
COWLING 1	E12 ,F1
COWLING 2	F2-4
CRANKCASE	B10
CRANKCASE COVER 1	B11-12
CRANKSHAFT. PISTON	A6
CYLINDER	A5
ELECTRICAL 1	F12 ,G1
ELECTRICAL 2	G2-3
EXHAUST	B9
FENDER	C10-11
FLASHER LIGHT	F7
FRAME	C8-9
FRONT BRAKE CALIPER	D12
FRONT FORK	D5-6
FRONT MASTER CYLINDER	E5-6
FRONT WHEEL	D11
FUEL TANK	D7-9
GENERATOR	F5
HANDLE SWITCH. LEVER	F11
HEADLIGHT	F9
INTAKE	B4-5
METER	F8
OIL CLEANER	B3
OIL PUMP	B2
RADIATOR. HOSE	A12 ,B1
REAR ARM	D1-2
REAR BRAKE CALIPER	E3
REAR MASTER CYLINDER	E10-11
REAR SUSPENSION	D3
REAR WHEEL	E1-2
SEAT	D10
SHIFT CAM. FORK	C6
SHIFT SHAFT	C7
SIDE COVER	C12
STAND. FOOTREST	E7-9
STARTER	C1
STARTING MOTOR	F6
STEERING	D4
STEERING HANDLE. CABLE	E4
TAILLIGHT	F10
TRANSMISSION	C4-5
VALVE	A7-8
WATER PUMP	A10-11

FRAME

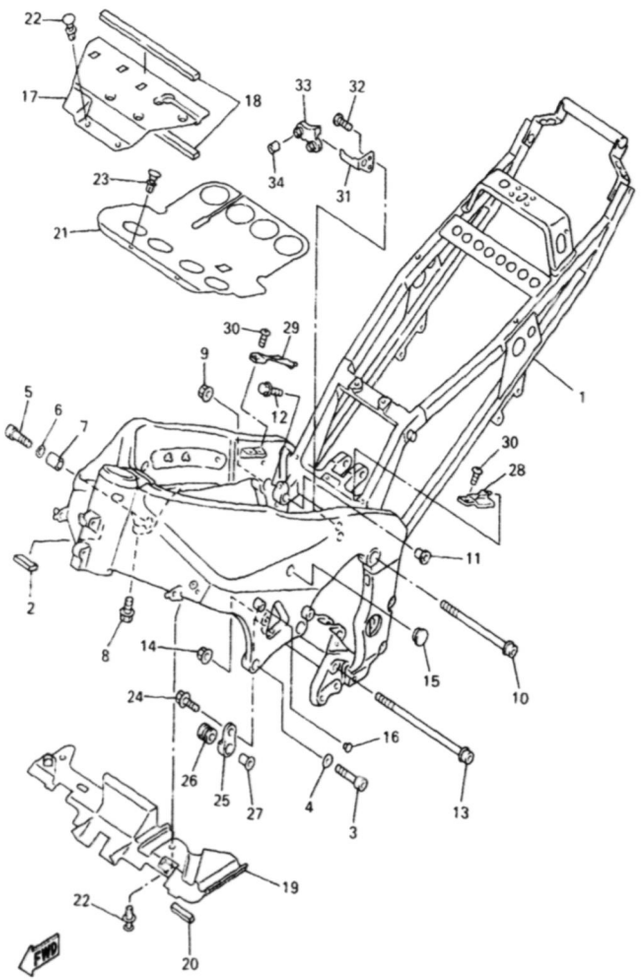

5JJ1300-0200

Ref. No.	Part Number	Description	Qty	Remarks
1	5JJ-21110-00-00	FRAME COMP.	1	
2	1KT-21746-00-00	DAMPER	1	
3	91314-10040-00	BOLT	2	
4	90201-10008-00	WASHER, PLATE	2	
5	91314-10050-00	BOLT	1	
6	90201-10008-00	WASHER, PLATE	1	
7	90387-12002-00	COLLAR	1	
8	95024-08035-00	BOLT, FLANGE	1	
9	90185-10002-00	NUT, SELF-LOCKING	1	
10	90109-104G5-00	BOLT	1	
11	90387-1112F-00	COLLAR	1	
12	95024-08035-00	BOLT, FLANGE	1	
13	90109-104G5-00	BOLT	1	
14	90185-10002-00	NUT, SELF-LOCKING	1	
15	90338-15202-00	PLUG	2	
16	90338-07124-00	PLUG	1	
17	4XV-2117M-00-00	COVER 2	1	
18	4XV-28371-00-00	DAMPER	2	
19	4XV-2137Y-01-00	GUIDE, AIR	1	
20	1KT-21746-00-00	DAMPER	1	
21	4XV-2117F-00-00	COVER	1	
22	90269-07077-00	RIVET	4	
23	90269-07084-00	RIVET	2	
24	95827-08025-00	BOLT, FLANGE	1	
25	4XV-21446-00-00	STAY, MUFFLER 2	1	
26	4XV-27424-00-00	DAMPER, FOOTREST 2	1	
27	90387-08005-00	COLLAR	1	
28	4XV-2117N-00-00	COVER 3	1	
29	4XV-2117R-00-00	COVER 4	1	

CONTINUED ON NEXT FRAME ➤

CONTENTS

AIR INDUCTION SYSTEM	B6
CAMSHAFT. CHAIN	A9
CARBURETOR	B7-8
CLUTCH	C2-3
COWLING 1	E12 ,F1
COWLING 2	F2-4
CRANKCASE	B10
CRANKCASE COVER 1	B11-12
CRANKSHAFT. PISTON	A6
CYLINDER	A5
ELECTRICAL 1	F12 ,G1
ELECTRICAL 2	G2-3
EXHAUST	B9
FENDER	C10-11
FLASHER LIGHT	F7
FRAME	C8-9
FRONT BRAKE CALIPER	D12
FRONT FORK	D5-6
FRONT MASTER CYLINDER	E5-6
FRONT WHEEL	D11
FUEL TANK	D7-9
GENERATOR	F5
HANDLE SWITCH. LEVER	F11
HEADLIGHT	F9
INTAKE	B4-5
METER	F8
OIL CLEANER	B3
OIL PUMP	B2
RADIATOR. HOSE	A12 ,B1
REAR ARM	D1-2
REAR BRAKE CALIPER	E3
REAR MASTER CYLINDER	E10-11
REAR SUSPENSION	D3
REAR WHEEL	E1-2
SEAT	D10
SHIFT CAM. FORK	C6
SHIFT SHAFT	C7
SIDE COVER	C12
STAND. FOOTREST	E7-9
STARTER	C1
STARTING MOTOR	F6
STEERING	D4
STEERING HANDLE. CABLE	E4
TAILLIGHT	F10
TRANSMISSION	C4-5
VALVE	A7-8
WATER PUMP	A10-11

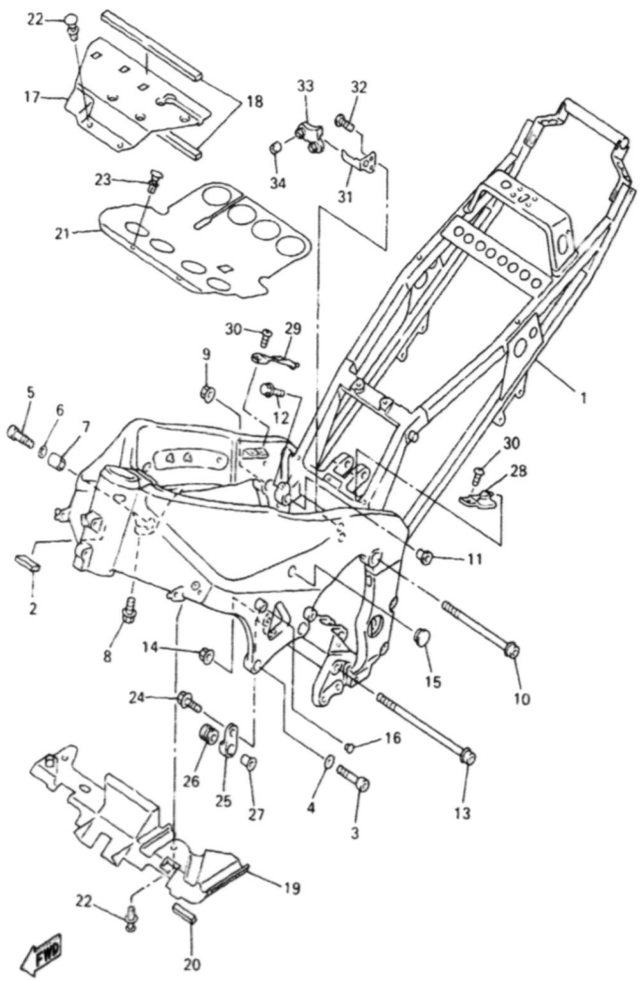

FRAME

Ref. No.	Part Number	Description	Qty	Remarks
30	90154-05013-00	SCREW, BINDING	2	
31	4XV-2116J-00-00	BRACKET 7	1	
32	98907-06016-00	SCREW, BIND	2	
33	4XV-2116A-00-00	STAY 1	1	
34	90387-061K9-00	COLLAR	2	

CONTENTS

AIR INDUCTION SYSTEM	B6
CAMSHAFT. CHAIN	A9
CARBURETOR	B7-8
CLUTCH	C2-3
COWLING 1	E12 ,F1
COWLING 2	F2-4
CRANKCASE	B10
CRANKCASE COVER 1	B11-12
CRANKSHAFT. PISTON	A6
CYLINDER	A5
ELECTRICAL 1	F12 ,G1
ELECTRICAL 2	G2-3
EXHAUST	B9
FENDER	C10-11
FLASHER LIGHT	F7
FRAME	C8-9
FRONT BRAKE CALIPER	D12
FRONT FORK	D5-6
FRONT MASTER CYLINDER	E5-6
FRONT WHEEL	D11
FUEL TANK	D7-9
GENERATOR	F5
HANDLE SWITCH. LEVER	F11
HEADLIGHT	F9
INTAKE	B4-5
METER	F8
OIL CLEANER	B3
OIL PUMP	B2
RADIATOR. HOSE	A12 ,B1
REAR ARM	D1-2
REAR BRAKE CALIPER	E3
REAR MASTER CYLINDER	E10-11
REAR SUSPENSION	D3
REAR WHEEL	E1-2
SEAT	D10
SHIFT CAM. FORK	C6
SHIFT SHAFT	C7
SIDE COVER	C12
STAND. FOOTREST	E7-9
STARTER	C1
STARTING MOTOR	F6
STEERING	D4
STEERING HANDLE. CABLE	E4
TAILLIGHT	F10
TRANSMISSION	C4-5
VALVE	A7-8
WATER PUMP	A10-11

FENDER

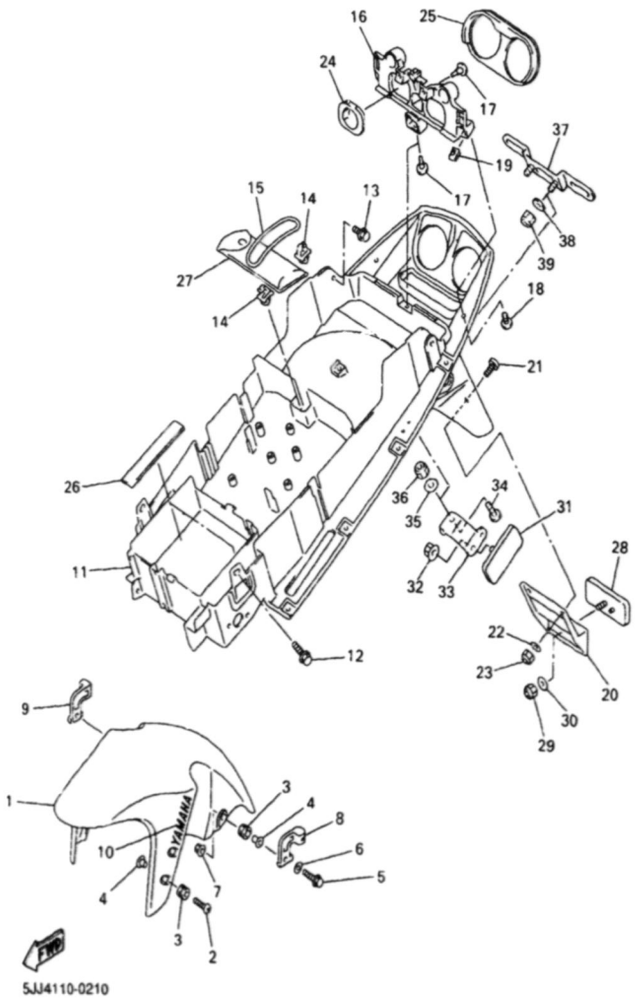

Ref. No.	Part Number	Description	Qty	Remarks
1	4XV-21511-01-P0	FENDER, FRONT	1	VRC1
	4XV-21511-01-P1	FENDER, FRONT	1	DPBMC
2	90154-06061-00	SCREW, BINDING	4	
3	90480-12072-00	GROMMET	6	
4	90387-065J6-00	COLLAR	6	
5	97007-06030-00	BOLT	2	
6	92907-06600-00	WASHER, PLATE	2	
7	95707-06500-00	NUT, FLANGE	2	
8	4XV-25875-00-00	HOLDER, BRAKE HOSE 1	1	
9	4XV-25876-00-00	HOLDER, BRAKE HOSE 2	1	
10	99241-00100-00	EMBLEM, YAMAHA	2	
11	5JJ-21611-00-00	FENDER, REAR	1	
12	90119-06010-00	BOLT, WITH WASHER	2	
13	90119-06009-00	BOLT, WITH WASHER	2	
14	90464-07259-00	CLAMP	2	
15	4XV-21376-00-00	BAND, TOOL	1	
16	5JJ-2117E-00-00	BRACKET, TAILLIGHT	1	
17	90269-07077-00	RIVET	3	
18	90154-05013-00	SCREW, BINDING	2	
19	90183-05061-00	NUT, SPRING	2	
20	4XV-85132-00-00	BRACKET, REFLECTOR 1	1	
21	90149-04278-00	SCREW	2	
22	90201-04018-00	WASHER, PLATE	2	
23	95607-04100-00	NUT, U	2	
24	5JJ-2172X-00-00	COVER, TAILLIGHT	2	
25	5JJ-21669-01-00	SEAL	1	
26	1AE-2834E-00-00	DAMPER	2	
27	4XV-28100-00-00	TOOL KIT	1	
28	3Y6-85130-02-00	REAR REFLECTOR ASSY	1	

CONTINUED ON NEXT FRAME ➤

CONTENTS

AIR INDUCTION SYSTEM	B6
CAMSHAFT. CHAIN	A9
CARBURETOR	B7-8
CLUTCH	C2-3
COWLING 1	E12 ,F1
COWLING 2	F2-4
CRANKCASE	B10
CRANKCASE COVER 1	B11-12
CRANKSHAFT. PISTON	A6
CYLINDER	A5
ELECTRICAL 1	F12 ,G1
ELECTRICAL 2	G2-3
EXHAUST	B9
FENDER	C10-11
FLASHER LIGHT	F7
FRAME	C8-9
FRONT BRAKE CALIPER	D12
FRONT FORK	D5-6
FRONT MASTER CYLINDER	E5-6
FRONT WHEEL	D11
FUEL TANK	D7-9
GENERATOR	F5
HANDLE SWITCH. LEVER	F11
HEADLIGHT	F9
INTAKE	B4-5
METER	F8
OIL CLEANER	B3
OIL PUMP	B2
RADIATOR. HOSE	A12 ,B1
REAR ARM	D1-2
REAR BRAKE CALIPER	E3
REAR MASTER CYLINDER	E10-11
REAR SUSPENSION	D3
REAR WHEEL	E1-2
SEAT	D10
SHIFT CAM. FORK	C6
SHIFT SHAFT	C7
SIDE COVER	C12
STAND. FOOTREST	E7-9
STARTER	C1
STARTING MOTOR	F6
STEERING	D4
STEERING HANDLE. CABLE	E4
TAILLIGHT	F10
TRANSMISSION	C4-5
VALVE	A7-8
WATER PUMP	A10-11

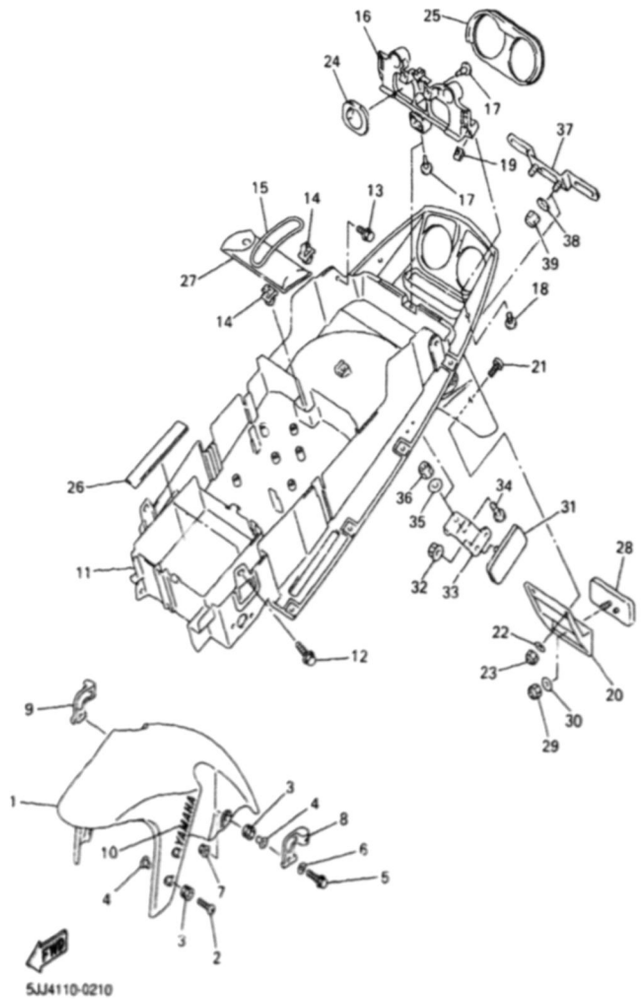

FENDER

Ref. No.	Part Number	Description	Qty	Remarks
29	95607-05100-00	NUT, U	1	
30	90201-05725-00	WASHER, PLATE	1	
31	3Y6-85130-02-00	REAR REFLECTOR ASSY	2	
32	95707-05500-00	NUT, FLANGE	2	
33	4XV-21688-00-00	BRACKET, REAR STAY	2	
34	90149-04278-00	SCREW	2	
35	90201-04018-00	WASHER, PLATE	2	
36	95607-04100-00	NUT, U	2	
37	5JJ-84751-00-00	BRACKET, LICENSE	1	
38	90201-06057-00	WASHER, PLATE	2	
39	95607-06100-00	NUT, U	2	

CONTENTS

AIR INDUCTION SYSTEM	B6
CAMSHAFT. CHAIN	A9
CARBURETOR	B7-8
CLUTCH	C2-3
COWLING 1	E12 ,F1
COWLING 2	F2-4
CRANKCASE	B10
CRANKCASE COVER 1	B11-12
CRANKSHAFT. PISTON	A6
CYLINDER	A5
ELECTRICAL 1	F12 ,G1
ELECTRICAL 2	G2-3
EXHAUST	B9
FENDER	C10-11
FLASHER LIGHT	F7
FRAME	C8-9
FRONT BRAKE CALIPER	D12
FRONT FORK	D5-6
FRONT MASTER CYLINDER	E5-6
FRONT WHEEL	D11
FUEL TANK	D7-9
GENERATOR	F5
HANDLE SWITCH. LEVER	F11
HEADLIGHT	F9
INTAKE	B4-5
METER	F8
OIL CLEANER	B3
OIL PUMP	B2
RADIATOR. HOSE	A12 ,B1
REAR ARM	D1-2
REAR BRAKE CALIPER	E3
REAR MASTER CYLINDER	E10-11
REAR SUSPENSION	D3
REAR WHEEL	E1-2
SEAT	D10
SHIFT CAM. FORK	C6
SHIFT SHAFT	C7
SIDE COVER	C12
STAND. FOOTREST	E7-9
STARTER	C1
STARTING MOTOR	F6
STEERING	D4
STEERING HANDLE. CABLE	E4
TAILLIGHT	F10
TRANSMISSION	C4-5
VALVE	A7-8
WATER PUMP	A10-11

SIDE COVER

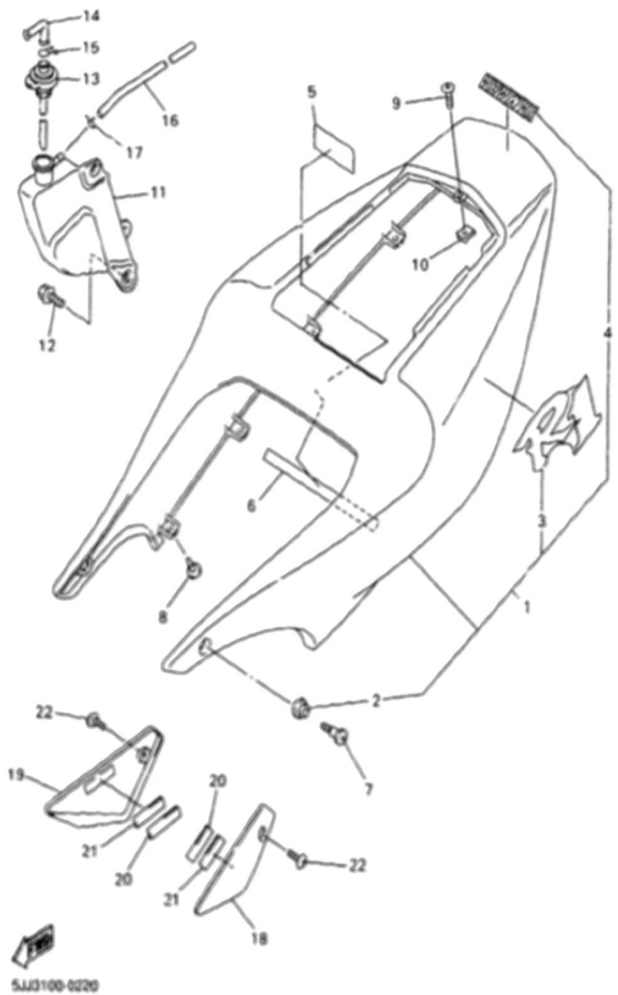

Ref. No.	Part Number	Description	Qty	Remarks
1	5JJ-Y2171-00-P1	COVER, SIDE 1	1	UR DPBMC
	5JJ-Y2171-10-P0	COVER, SIDE 1	1	UR VRC1
2	90480-13398-00	. GROMMET	2	
3	4XV-21781-30-00	. EMBLEM 1	2	UR FOR DPBMC
	4XV-21781-40-00	. EMBLEM 1	2	UR FOR VRC1
4	99241-00080-00	. EMBLEM, YAMAHA	1	
5	5JJ-2179R-00-00	PLATE, EPA 2 (CALIFORNIA) .	1	(5JJ4)
	5JJ-2179V-00-00	PLATE, EPA 1 (NON CALIFORNIA)	1	()
6	5JJ-21746-00-00	DAMPER	1	
7	90150-06036-00	SCREW, ROUND HEAD	2	
8	90269-07077-00	RIVET	8	
9	90150-05039-00	SCREW, ROUND HEAD	1	
10	90183-05061-00	NUT, SPRING	1	
11	4XV-21871-00-00	TANK, RECOVERY	1	
12	90119-06117-00	BOLT, WITH WASHER	2	
13	4XV-21875-00-00	CAP	1	
14	26H-21828-00-00	ELBOW	1	
15	90467-11019-00	CLIP	1	
16	90445-086J6-00	HOSE (L1040)	1	
17	90467-08003-00	CLIP	1	
18	5JJ-24129-00-00	COVER, SIDE 1	1	
19	5JJ-24139-00-00	COVER, SIDE 2	1	
20	4XV-2411G-00-00	HOOK, SIDE COVER	2	
21	4XV-2411H-00-00	HOOK, SIDE COVER 2	2	
22	90110-05201-00	BOLT, HEXAGON SOCKET HEAD	2	

CONTENTS

AIR INDUCTION SYSTEM	B6
CAMSHAFT, CHAIN	A9
CARBURETOR	B7-8
CLUTCH	C2-3
COWLING 1	E12 ,F1
COWLING 2	F2-4
CRANKCASE	B10
CRANKCASE COVER 1	B11-12
CRANKSHAFT, PISTON	A6
CYLINDER	A5
ELECTRICAL 1	F12 ,G1
ELECTRICAL 2	G2-3
EXHAUST	B9
FENDER	C10-11
FLASHER LIGHT	F7
FRAME	C8-9
FRONT BRAKE CALIPER	D12
FRONT FORK	D5-6
FRONT MASTER CYLINDER	E5-6
FRONT WHEEL	D11
FUEL TANK	D7-9
GENERATOR	F5
HANDLE SWITCH, LEVER	F11
HEADLIGHT	F9
INTAKE	B4-5
METER	F8
OIL CLEANER	B3
OIL PUMP	B2
RADIATOR, HOSE	A12 ,B1
REAR ARM	D1-2
REAR BRAKE CALIPER	E3
REAR MASTER CYLINDER	E10-11
REAR SUSPENSION	D3
REAR WHEEL	E1-2
SEAT	D10
SHIFT CAM, FORK	C6
SHIFT SHAFT	C7
SIDE COVER	C12
STAND, FOOTREST	E7-9
STARTER	C1
STARTING MOTOR	F6
STEERING	D4
STEERING HANDLE, CABLE	E4
TAILLIGHT	F10
TRANSMISSION	C4-5
VALVE	A7-8
WATER PUMP	A10-11

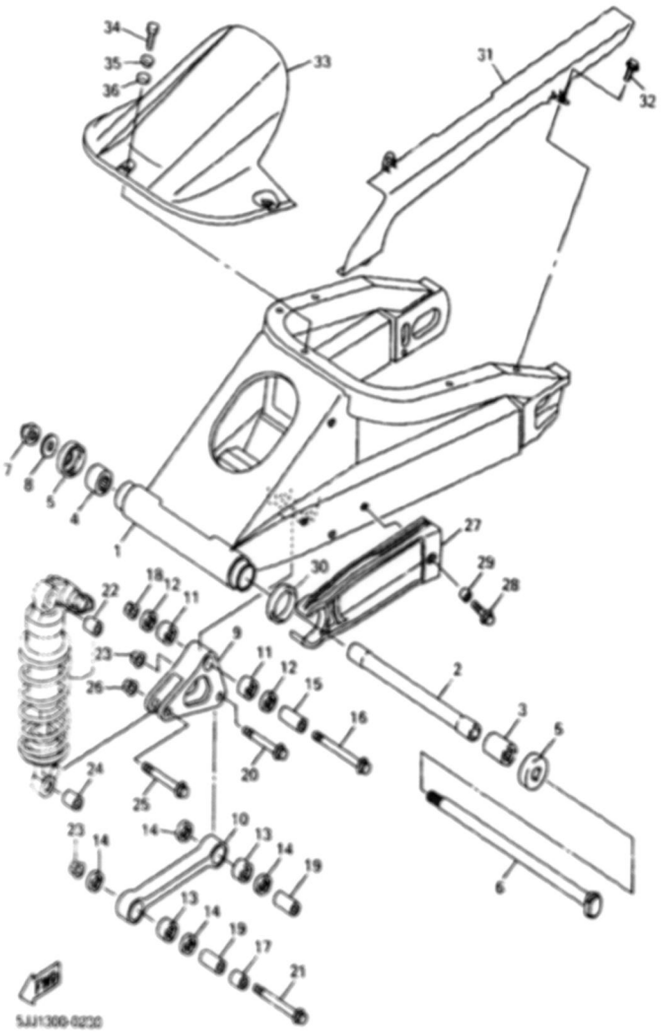

REAR ARM

Ref. No.	Part Number	Description	Qty	Remarks
1	5JJ-22110-00-00	REAR ARM COMP.	1	
2	4XV-22184-00-00	BUSH	1	
3	93315-42523-00	BEARING	1	
4	93315-42536-00	BEARING	1	
5	5JJ-22128-00-00	COVER, THRUST 1	2	
6	4FN-22141-00-00	SHAFT, PIVOT	1	
7	90185-18167-00	NUT, SELF-LOCKING	1	
8	90201-18264-00	WASHER, PLATE	1	
9	4XV-2217A-00-00	ARM, RELAY	1	
10	4XV-2217M-00-00	ARM 1	1	
11	93315-31758-00	BEARING	2	
12	93109-17071-00	OIL SEAL	2	
13	93315-31758-00	BEARING	2	
14	93109-17071-00	OIL SEAL	4	
15	90387-1012B-00	COLLAR	1	
16	90105-10021-00	BOLT, WASHER BASED	1	
17	90387-1013U-00	COLLAR	1	
18	95607-10200-00	NUT, SELF-LOCKING	1	
19	90387-1012A-00	COLLAR	2	
20	90105-10017-00	BOLT, WASHER BASED	1	
21	90105-10018-00	BOLT, WASHER BASED	1	
22	90387-1013U-00	COLLAR	1	
23	95607-10200-00	NUT, SELF-LOCKING	2	
24	90387-1012A-00	COLLAR	1	
25	90105-10017-00	BOLT, WASHER BASED	1	
26	95607-10200-00	NUT, SELF-LOCKING	1	
27	5JJ-22151-00-00	SEAL, GUARD	1	
28	90119-06096-00	BOLT, WITH WASHER	1	
29	90387-06372-00	COLLAR	1	

CONTINUED ON NEXT FRAME ➤

CONTENTS

AIR INDUCTION SYSTEM	B6
CAMSHAFT, CHAIN	A9
CARBURETOR	B7-8
CLUTCH	C2-3
COWLING 1	E12 ,F1
COWLING 2	F2-4
CRANKCASE	B10
CRANKCASE COVER 1	B11-12
CRANKSHAFT, PISTON	A6
CYLINDER	A5
ELECTRICAL 1	F12 ,G1
ELECTRICAL 2	G2-3
EXHAUST	B9
FENDER	C10-11
FLASHER LIGHT	F7
FRAME	C8-9
FRONT BRAKE CALIPER	D12
FRONT FORK	D5-6
FRONT MASTER CYLINDER	E5-6
FRONT WHEEL	D11
FUEL TANK	D7-9
GENERATOR	F5
HANDLE SWITCH, LEVER	F11
HEADLIGHT	F9
INTAKE	B4-5
METER	F8
OIL CLEANER	B3
OIL PUMP	B2
RADIATOR, HOSE	A12 ,B1
REAR ARM	D1-2
REAR BRAKE CALIPER	E3
REAR MASTER CYLINDER	E10-11
REAR SUSPENSION	D3
REAR WHEEL	E1-2
SEAT	D10
SHIFT CAM, FORK	C6
SHIFT SHAFT	C7
SIDE COVER	C12
STAND, FOOTREST	E7-9
STARTER	C1
STARTING MOTOR	F6
STEERING	D4
STEERING HANDLE, CABLE	E4
TAILLIGHT	F10
TRANSMISSION	C4-5
VALVE	A7-8
WATER PUMP	A10-11

REAR ARM

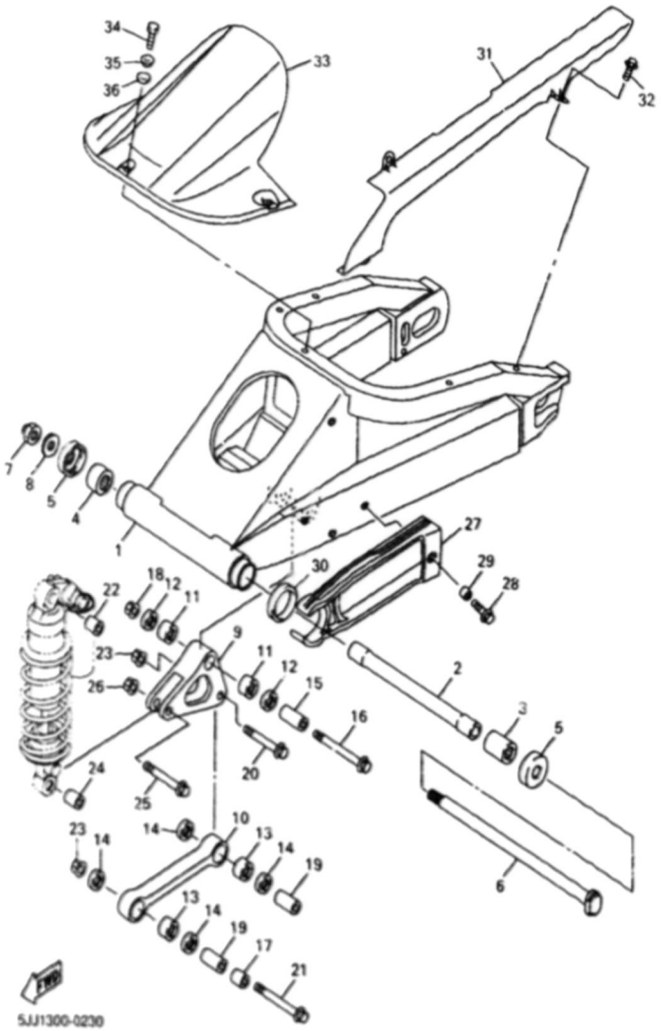

Ref. No.	Part Number	Description	Qty	Remarks
30	5JJ-2214F-00-00	DAMPER 1	1	
31	4XV-22311-01-00	CASE, CHAIN	1	
32	90119-06052-00	BOLT, WITH WASHER	3	
33	4XV-21650-01-33	REAR FENDER COMP.	1	UR YB FOR VRC1
	4XV-21650-01-P1	REAR FENDER COMP.	1	UR DPBMC
34	97007-06016-00	BOLT	3	
35	90387-0615J-00	COLLAR	3	
36	4XV-28372-00-00	DAMPER	3	

CONTENTS

AIR INDUCTION SYSTEM	B6
CAMSHAFT. CHAIN	A9
CARBURETOR	B7-8
CLUTCH	C2-3
COWLING 1	E12 ,F1
COWLING 2	F2-4
CRANKCASE	B10
CRANKCASE COVER 1	B11-12
CRANKSHAFT. PISTON	A6
CYLINDER	A5
ELECTRICAL 1	F12 ,G1
ELECTRICAL 2	G2-3
EXHAUST	B9
FENDER	C10-11
FLASHER LIGHT	F7
FRAME	C8-9
FRONT BRAKE CALIPER	D12
FRONT FORK	D5-6
FRONT MASTER CYLINDER	E5-6
FRONT WHEEL	D11
FUEL TANK	D7-9
GENERATOR	F5
HANDLE SWITCH. LEVER	F11
HEADLIGHT	F9
INTAKE	B4-5
METER	F8
OIL CLEANER	B3
OIL PUMP	B2
RADIATOR. HOSE	A12 ,B1
REAR ARM	D1-2
REAR BRAKE CALIPER	E3
REAR MASTER CYLINDER	E10-11
REAR SUSPENSION	D3
REAR WHEEL	E1-2
SEAT	D10
SHIFT CAM. FORK	C6
SHIFT SHAFT	C7
SIDE COVER	C12
STAND. FOOTREST	E7-9
STARTER	C1
STARTING MOTOR	F6
STEERING	D4
STEERING HANDLE. CABLE	E4
TAILLIGHT	F10
TRANSMISSION	C4-5
VALVE	A7-8
WATER PUMP	A10-11

REAR SUSPENSION

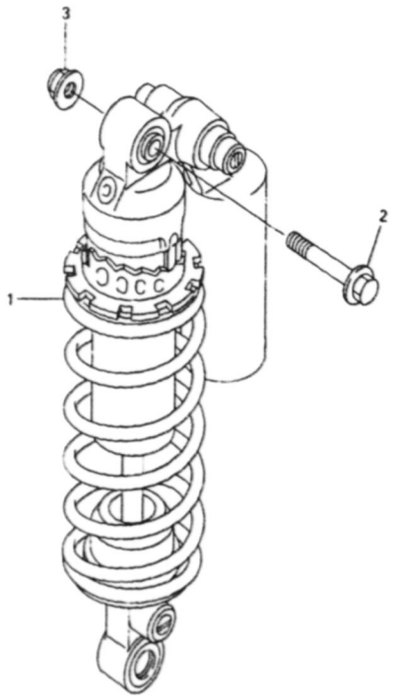

5JJ1300-0240

Ref. No.	Part Number	Description	Qty	Remarks
1	5JJ-22210-10-00	SHOCK ABSORBER ASSY, REAR	1	
2	90105-10020-00	BOLT, WASHER BASED	1	
3	95607-10200-00	NUT, SELF-LOCKING	1	

CONTENTS

AIR INDUCTION SYSTEM	B6
CAMSHAFT. CHAIN	A9
CARBURETOR	B7-8
CLUTCH	C2-3
COWLING 1	E12 ,F1
COWLING 2	F2-4
CRANKCASE	B10
CRANKCASE COVER 1	B11-12
CRANKSHAFT. PISTON	A6
CYLINDER	A5
ELECTRICAL 1	F12 ,G1
ELECTRICAL 2	G2-3
EXHAUST	B9
FENDER	C10-11
FLASHER LIGHT	F7
FRAME	C8-9
FRONT BRAKE CALIPER	D12
FRONT FORK	D5-6
FRONT MASTER CYLINDER	E5-6
FRONT WHEEL	D11
FUEL TANK	D7-9
GENERATOR	F5
HANDLE SWITCH. LEVER	F11
HEADLIGHT	F9
INTAKE	B4-5
METER	F8
OIL CLEANER	B3
OIL PUMP	B2
RADIATOR. HOSE	A12 ,B1
REAR ARM	D1-2
REAR BRAKE CALIPER	E3
REAR MASTER CYLINDER	E10-11
REAR SUSPENSION	D3
REAR WHEEL	E1-2
SEAT	D10
SHIFT CAM. FORK	C6
SHIFT SHAFT	C7
SIDE COVER	C12
STAND. FOOTREST	E7-9
STARTER	C1
STARTING MOTOR	F6
STEERING	D4
STEERING HANDLE. CABLE	E4
TAILLIGHT	F10
TRANSMISSION	C4-5
VALVE	A7-8
WATER PUMP	A10-11

STEERING

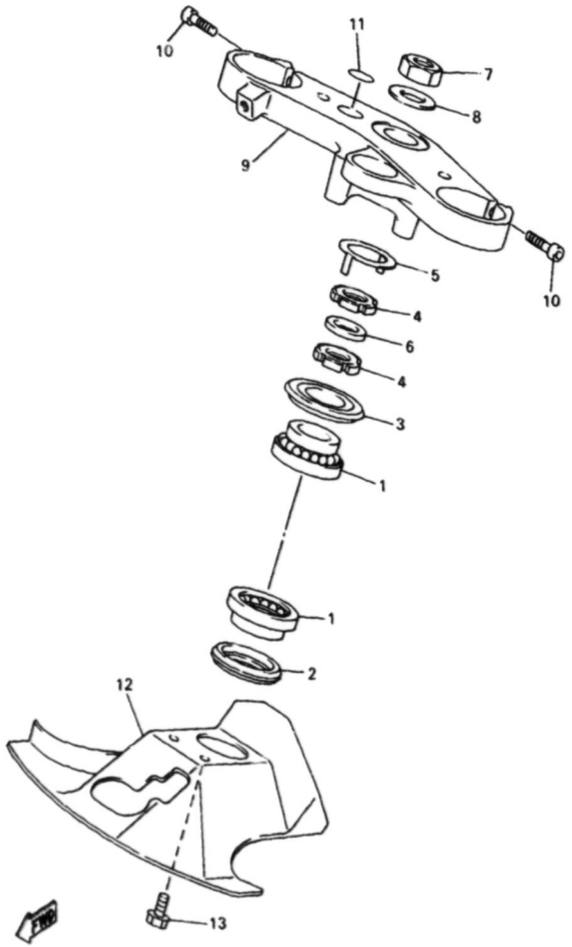

Ref. No.	Part Number	Description	Qty	Remarks
1	93399-99932-00	BEARING	2	
2	3FV-23462-00-00	SEAL, STEERING	1	
3	4XV-23415-00-00	COVER, BALL RACE 1	1	
4	90179-30691-00	NUT	2	
5	4XV-23418-00-00	WASHER, SPECIAL	1	
6	90202-30235-00	WASHER, PLATE	1	
7	90170-28419-00	NUT	1	
8	90201-281U8-00	WASHER, PLATE	1	
9	4XV-23435-00-00	CROWN, HANDLE	1	
10	91314-08030-00	BOLT	2	
11	4XV-2341B-00-00	EMBLEM	1	
12	4XV-23818-00-00	COVER, STEERING	1	
13	90119-06114-00	BOLT, WITH WASHER	2	

CONTENTS

AIR INDUCTION SYSTEM B6
CAMSHAFT. CHAIN A9
CARBURETOR B7-8
CLUTCH C2-3
COWLING 1 E12 ,F1
COWLING 2 F2-4
CRANKCASE B10
CRANKCASE COVER 1 B11-12
CRANKSHAFT. PISTON A6
CYLINDER A5
ELECTRICAL 1 F12 ,G1
ELECTRICAL 2 G2-3
EXHAUST B9
FENDER C10-11
FLASHER LIGHT F7
FRAME C8-9
FRONT BRAKE CALIPER D12
FRONT FORK D5-6
FRONT MASTER CYLINDER E5-6
FRONT WHEEL D11
FUEL TANK D7-9
GENERATOR F5
HANDLE SWITCH. LEVER F11
HEADLIGHT F9
INTAKE B4-5
METER F8
OIL CLEANER B3
OIL PUMP B2
RADIATOR. HOSE A12 ,B1
REAR ARM D1-2
REAR BRAKE CALIPER E3
REAR MASTER CYLINDER E10-11
REAR SUSPENSION D3
REAR WHEEL E1-2
SEAT D10
SHIFT CAM. FORK C6
SHIFT SHAFT C7
SIDE COVER C12
STAND. FOOTREST E7-9
STARTER C1
STARTING MOTOR F6
STEERING D4
STEERING HANDLE. CABLE E4
TAILLIGHT F10
TRANSMISSION C4-5
VALVE A7-8
WATER PUMP A10-11

FRONT FORK

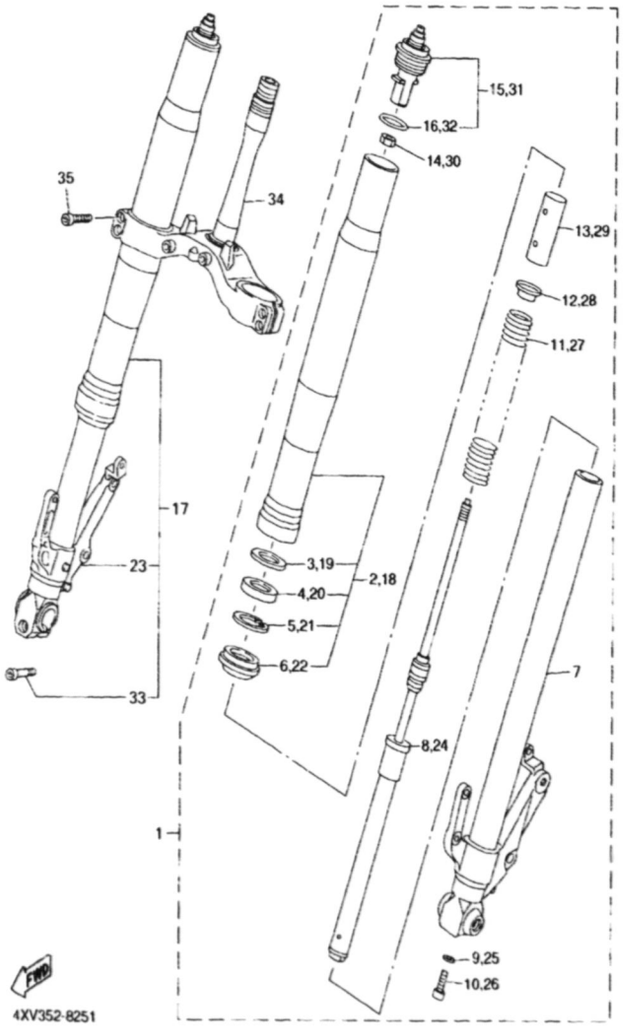

Ref. No.	Part Number	Description	Qty	Remarks
1	5JJ-23102-00-00	FRONT FORK ASSY (L.H)	1	
2	5JJ-23136-00-00	. TUBE, OUTER (RIGHT)	1	
3	5JJ-23146-00-00	. . WASHER, OIL SEAL	1	
4	4XV-23145-00-00	. . OIL SEAL	1	
5	26H-23156-00-00	. . CLIP, OIL SEAL	1	
6	4EB-23144-00-00	. . SEAL, DUST	1	
7	4XV-23110-00-00	. INNER TUBE COMP 1	1	
8	5JJ-23170-00-00	. CYLINDER COMP., FRONT FORK	1	
9	2K8-23158-L0-00	. GASKET	1	
10	3LC-23181-00-00	. BOLT, HEXAGON SOCKET HEAD	1	
11	5JJ-23141-00-00	. SPRING, FRONT FORK	1	
12	4XV-23142-00-00	. SEAT, SPRING UPPER	1	
13	4XV-23118-00-00	. SPACER	1	
14	3LC-23357-00-00	. NUT	1	
15	4XV-23111-00-00	. BOLT, CAP	1	
16	3XJ-23147-L0-00	. . O-RING	1	
17	5JJ-23103-00-00	FRONT FORK ASSY (R.H)	1	
18	5JJ-23136-00-00	. TUBE, OUTER (RIGHT)	1	
19	5JJ-23146-00-00	. . WASHER, OIL SEAL	1	
20	4XV-23145-00-00	. . OIL SEAL	1	
21	26H-23156-00-00	. . CLIP, OIL SEAL	1	
22	4EB-23144-00-00	. . SEAL, DUST	1	
23	4XV-23120-00-00	. INNER TUBE COMP 2	1	
24	5JJ-23170-00-00	. CYLINDER COMP., FRONT FORK	1	
25	2K8-23158-L0-00	. GASKET	1	
26	3LC-23181-00-00	. BOLT, HEXAGON SOCKET HEAD	1	

CONTINUED ON NEXT FRAME ➤

CONTENTS

AIR INDUCTION SYSTEM	B6
CAMSHAFT. CHAIN	A9
CARBURETOR	B7-8
CLUTCH	C2-3
COWLING 1	E12 ,F1
COWLING 2	F2-4
CRANKCASE	B10
CRANKCASE COVER 1	B11-12
CRANKSHAFT. PISTON	A6
CYLINDER	A5
ELECTRICAL 1	F12 ,G1
ELECTRICAL 2	G2-3
EXHAUST	B9
FENDER	C10-11
FLASHER LIGHT	F7
FRAME	C8-9
FRONT BRAKE CALIPER	D12
FRONT FORK	D5-6
FRONT MASTER CYLINDER	E5-6
FRONT WHEEL	D11
FUEL TANK	D7-9
GENERATOR	F5
HANDLE SWITCH. LEVER	F11
HEADLIGHT	F9
INTAKE	B4-5
METER	F8
OIL CLEANER	B3
OIL PUMP	B2
RADIATOR. HOSE	A12 ,B1
REAR ARM	D1-2
REAR BRAKE CALIPER	E3
REAR MASTER CYLINDER	E10-11
REAR SUSPENSION	D3
REAR WHEEL	E1-2
SEAT	D10
SHIFT CAM. FORK	C6
SHIFT SHAFT	C7
SIDE COVER	C12
STAND. FOOTREST	E7-9
STARTER	C1
STARTING MOTOR	F6
STEERING	D4
STEERING HANDLE. CABLE	E4
TAILLIGHT	F10
TRANSMISSION	C4-5
VALVE	A7-8
WATER PUMP	A10-11

FRONT FORK

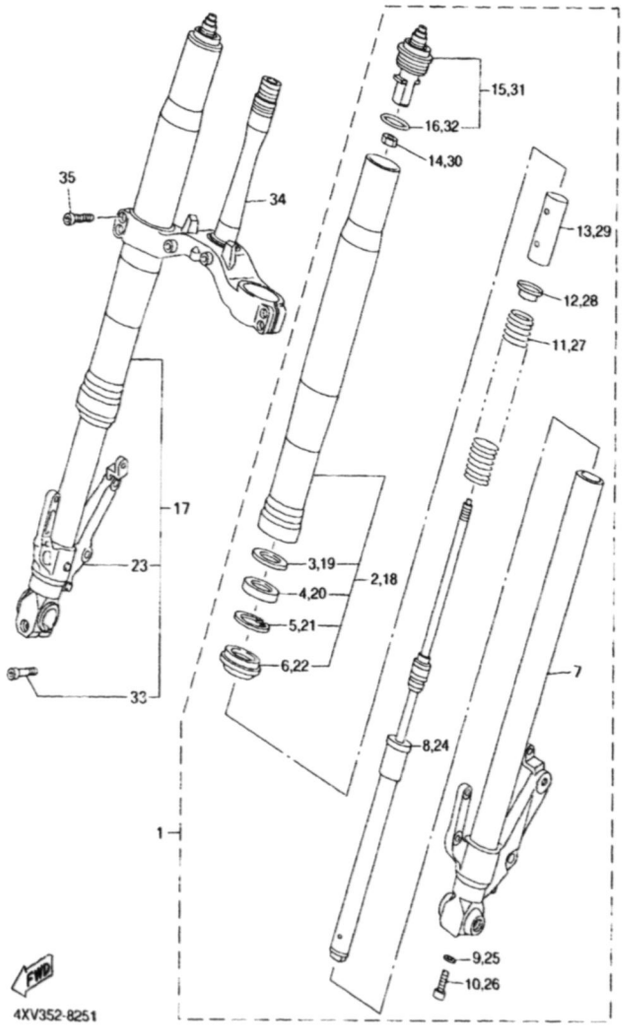

Ref. No.	Part Number	Description	Qty	Remarks
27	5JJ-23141-00-00	. SPRING, FRONT FORK	1	
28	4XV-23142-00-00	. SEAT, SPRING UPPER	1	
29	4XV-23118-00-00	. SPACER	1	
30	3LC-23357-00-00	. NUT	1	
31	4XV-23111-00-00	. BOLT, CAP	1	
32	3XJ-23147-L0-00	. . O-RING	1	
33	91314-08040-00	. BOLT	1	
34	5JJ-23340-00-00	UNDER BRACKET COMP.	1	
35	91314-08030-00	BOLT	4	

CONTENTS

AIR INDUCTION SYSTEM B6
CAMSHAFT. CHAIN A9
CARBURETOR B7-8
CLUTCH C2-3
COWLING 1 E12 ,F1
COWLING 2 F2-4
CRANKCASE B10
CRANKCASE COVER 1 B11-12
CRANKSHAFT. PISTON A6
CYLINDER A5
ELECTRICAL 1 F12 ,G1
ELECTRICAL 2 G2-3
EXHAUST B9
FENDER C10-11
FLASHER LIGHT F7
FRAME C8-9
FRONT BRAKE CALIPER D12
FRONT FORK D5-6
FRONT MASTER CYLINDER E5-6
FRONT WHEEL D11
FUEL TANK D7-9
GENERATOR F5
HANDLE SWITCH. LEVER F11
HEADLIGHT F9
INTAKE B4-5
METER F8
OIL CLEANER B3
OIL PUMP B2
RADIATOR. HOSE A12 ,B1
REAR ARM D1-2
REAR BRAKE CALIPER E3
REAR MASTER CYLINDER E10-11
REAR SUSPENSION D3
REAR WHEEL E1-2
SEAT D10
SHIFT CAM. FORK C6
SHIFT SHAFT C7
SIDE COVER C12
STAND. FOOTREST E7-9
STARTER C1
STARTING MOTOR F6
STEERING D4
STEERING HANDLE. CABLE E4
TAILLIGHT F10
TRANSMISSION C4-5
VALVE A7-8
WATER PUMP A10-11

FUEL TANK

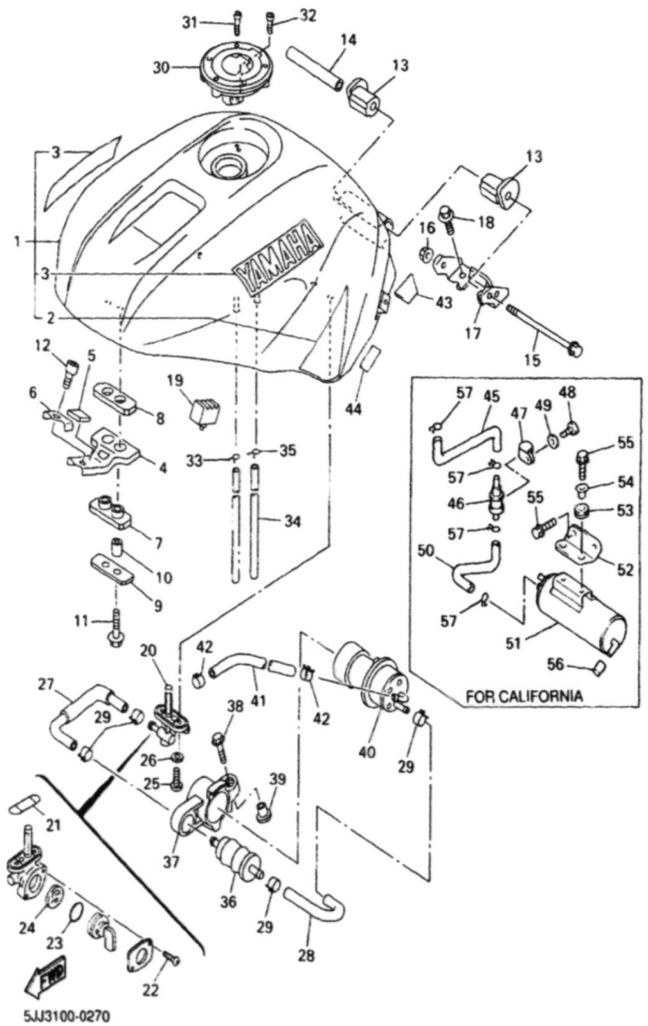

Ref. No.	Part Number	Description	Qty	Remarks
1	5JJ-Y2410-30-01	FUEL TANK COMP.	1	UR VRC1
	5JJ-Y2410-30-02	FUEL TANK COMP.	1	UR DPBMC
2	5JJ-24240-00-00	. GRAPHIC SET	1	FOR VRC1
3	99221-00180-00	. EMBLEM, YAMAHA	2	
4	5JJ-24191-00-00	BRACKET, FUEL TANK 1	1	
5	1AE-2837J-00-00	DAMPER 5	1	
6	5JJ-24186-00-00	WASHER, SPECIAL	1	
7	2GH-24181-00-00	DAMPER, LOCATING 1	1	
8	2GH-24183-00-00	DAMPER, LOCATING 3	1	
9	5JJ-24187-00-00	WASHER, SPECIAL	1	
10	90387-06006-00	COLLAR	2	
11	90119-06190-00	BOLT, WITH WASHER	2	
12	91314-06016-00	BOLT	1	
13	4YR-24181-00-00	DAMPER, LOCATING 1	2	
14	90387-06007-00	COLLAR	1	
15	95817-06110-00	BOLT, FLANGE	1	
16	95607-06200-00	NUT, SELF U-FLANGE	1	
17	5JJ-21348-00-00	BRACKT, TANK FITTING	1	
18	90119-06044-00	BOLT, WITH WASHER	2	
19	4XV-24183-00-00	DAMPER, LOCATING 3	2	
20	4KM-24500-10-00	FUEL COCK ASSY 1	1	
21	4X8-24512-00-00	. O-RING	1	
22	98507-03008-00	. SCREW, PAN HEAD	2	
23	3AJ-24534-00-00	. SEAL, COCK	1	
24	3AJ-24523-00-00	. VALVE PACKING	1	
25	90149-06011-00	SCREW	2	
26	90202-05193-00	WASHER, PLATE	2	
27	4XV-24311-00-00	PIPE, FUEL 1	1	
28	4XV-24312-00-00	PIPE 2	1	

CONTINUED ON NEXT FRAME ➤

CONTENTS

AIR INDUCTION SYSTEM	B6
CAMSHAFT. CHAIN	A9
CARBURETOR	B7-8
CLUTCH	C2-3
COWLING 1	E12 ,F1
COWLING 2	F2-4
CRANKCASE	B10
CRANKCASE COVER 1	B11-12
CRANKSHAFT. PISTON	A6
CYLINDER	A5
ELECTRICAL 1	F12 ,G1
ELECTRICAL 2	G2-3
EXHAUST	B9
FENDER	C10-11
FLASHER LIGHT	F7
FRAME	C8-9
FRONT BRAKE CALIPER	D12
FRONT FORK	D5-6
FRONT MASTER CYLINDER	E5-6
FRONT WHEEL	D11
FUEL TANK	D7-9
GENERATOR	F5
HANDLE SWITCH. LEVER	F11
HEADLIGHT	F9
INTAKE	B4-5
METER	F8
OIL CLEANER	B3
OIL PUMP	B2
RADIATOR. HOSE	A12 ,B1
REAR ARM	D1-2
REAR BRAKE CALIPER	E3
REAR MASTER CYLINDER	E10-11
REAR SUSPENSION	D3
REAR WHEEL	E1-2
SEAT	D10
SHIFT CAM. FORK	C6
SHIFT SHAFT	C7
SIDE COVER	C12
STAND. FOOTREST	E7-9
STARTER	C1
STARTING MOTOR	F6
STEERING	D4
STEERING HANDLE. CABLE	E4
TAILLIGHT	F10
TRANSMISSION	C4-5
VALVE	A7-8
WATER PUMP	A10-11

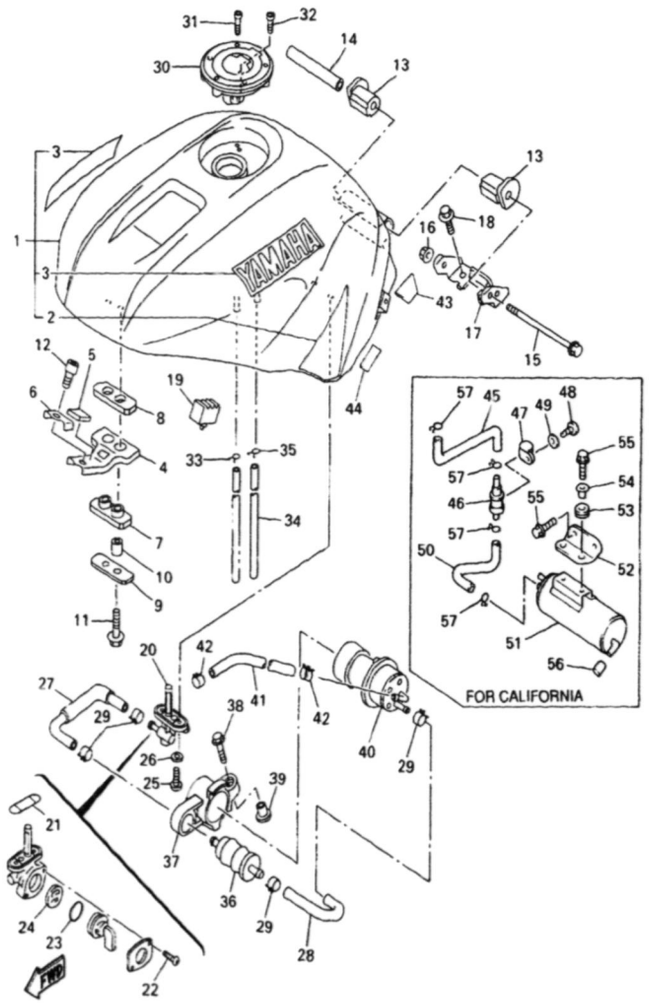

FUEL TANK

Ref. No.	Part Number	Description	Qty	Remarks
29	90467-12124-00	CLIP	4	
30	5JJ-24602-00-00	CAP ASSY	1	
31	90110-05112-00	BOLT, HEXAGON SOCKET HEAD	3	
32	91317-05010-00	BOLT	1	
33	90467-09006-00	CLIP	1	
34	90445-10015-00	HOSE	1	()
35	90467-09006-00	CLIP	1	()
36	1FK-24560-00-00	FILTER ASSY	1	
37	4XV-24398-01-00	BAND 1	1	
38	90119-06096-00	BOLT, WITH WASHER	1	
39	90387-062L2-00	COLLAR	1	
40	4SV-13907-01-00	FUEL PUMP COMP.	1	
41	90445-142K2-00	HOSE (L200)	1	
42	90467-13123-00	CLIP	2	
43	3SP-21732-00-00	SEAL 1	2	
44	5H0-8235Y-M0-00	DAMPER	2	
45	4XV-24313-01-00	PIPE 3	1	(5JJ4)
46	25H-24180-00-00	ROLL OVER VALVE ASSY	1	(5JJ4)
47	90461-15100-00	CLAMP	1	(5JJ4)
48	98507-05012-00	SCREW, PAN HEAD	1	(5JJ4)
49	92907-05600-00	WASHER, PLATE	1	(5JJ4)
50	4XV-24314-00-00	PIPE 4	1	(5JJ4)
51	4XV-24170-00-00	CANISTER ASSY	1	(5JJ4)
52	4XV-2419F-00-00	BRACKET, CANISTOR	1	(5JJ4)
53	90480-13163-00	GROMMET	2	(5JJ4)
54	90387-062L2-00	COLLAR	2	(5JJ4)
55	95027-06016-00	BOLT, FLANGE	4	(5JJ4)
56	90445-11418-00	HOSE (L18)	1	(5JJ4)

CONTINUED ON NEXT FRAME ➤

CONTENTS

AIR INDUCTION SYSTEM	B6
CAMSHAFT. CHAIN	A9
CARBURETOR	B7-8
CLUTCH	C2-3
COWLING 1	E12 ,F1
COWLING 2	F2-4
CRANKCASE	B10
CRANKCASE COVER 1	B11-12
CRANKSHAFT. PISTON	A6
CYLINDER	A5
ELECTRICAL 1	F12 ,G1
ELECTRICAL 2	G2-3
EXHAUST	B9
FENDER	C10-11
FLASHER LIGHT	F7
FRAME	C8-9
FRONT BRAKE CALIPER	D12
FRONT FORK	D5-6
FRONT MASTER CYLINDER	E5-6
FRONT WHEEL	D11
FUEL TANK	D7-9
GENERATOR	F5
HANDLE SWITCH. LEVER	F11
HEADLIGHT	F9
INTAKE	B4-5
METER	F8
OIL CLEANER	B3
OIL PUMP	B2
RADIATOR. HOSE	A12 ,B1
REAR ARM	D1-2
REAR BRAKE CALIPER	E3
REAR MASTER CYLINDER	E10-11
REAR SUSPENSION	D3
REAR WHEEL	E1-2
SEAT	D10
SHIFT CAM. FORK	C6
SHIFT SHAFT	C7
SIDE COVER	C12
STAND. FOOTREST	E7-9
STARTER	C1
STARTING MOTOR	F6
STEERING	D4
STEERING HANDLE. CABLE	E4
TAILLIGHT	F10
TRANSMISSION	C4-5
VALVE	A7-8
WATER PUMP	A10-11

FUEL TANK

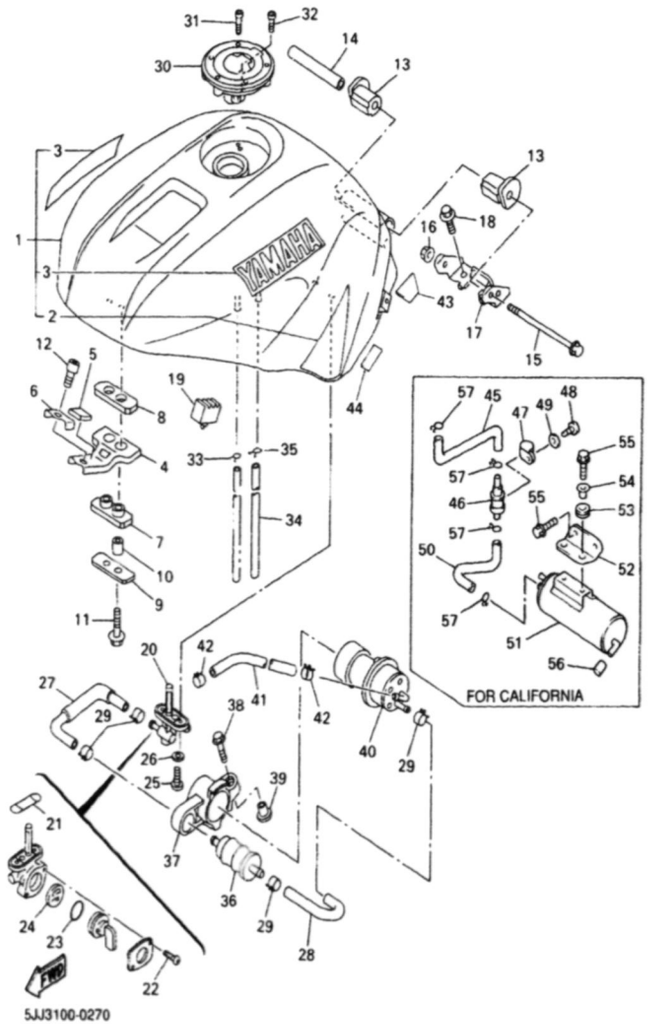

Ref. No.	Part Number	Description	Qty	Remarks
57	90467-10008-00	CLIP	4	(5JJ4)

CONTENTS

AIR INDUCTION SYSTEM	B6
CAMSHAFT. CHAIN	A9
CARBURETOR	B7-8
CLUTCH	C2-3
COWLING 1	E12 ,F1
COWLING 2	F2-4
CRANKCASE	B10
CRANKCASE COVER 1	B11-12
CRANKSHAFT. PISTON	A6
CYLINDER	A5
ELECTRICAL 1	F12 ,G1
ELECTRICAL 2	G2-3
EXHAUST	B9
FENDER	C10-11
FLASHER LIGHT	F7
FRAME	C8-9
FRONT BRAKE CALIPER	D12
FRONT FORK	D5-6
FRONT MASTER CYLINDER	E5-6
FRONT WHEEL	D11
FUEL TANK	D7-9
GENERATOR	F5
HANDLE SWITCH. LEVER	F11
HEADLIGHT	F9
INTAKE	B4-5
METER	F8
OIL CLEANER	B3
OIL PUMP	B2
RADIATOR. HOSE	A12 ,B1
REAR ARM	D1-2
REAR BRAKE CALIPER	E3
REAR MASTER CYLINDER	E10-11
REAR SUSPENSION	D3
REAR WHEEL	E1-2
SEAT	D10
SHIFT CAM. FORK	C6
SHIFT SHAFT	C7
SIDE COVER	C12
STAND. FOOTREST	E7-9
STARTER	C1
STARTING MOTOR	F6
STEERING	D4
STEERING HANDLE. CABLE	E4
TAILLIGHT	F10
TRANSMISSION	C4-5
VALVE	A7-8
WATER PUMP	A10-11

SEAT

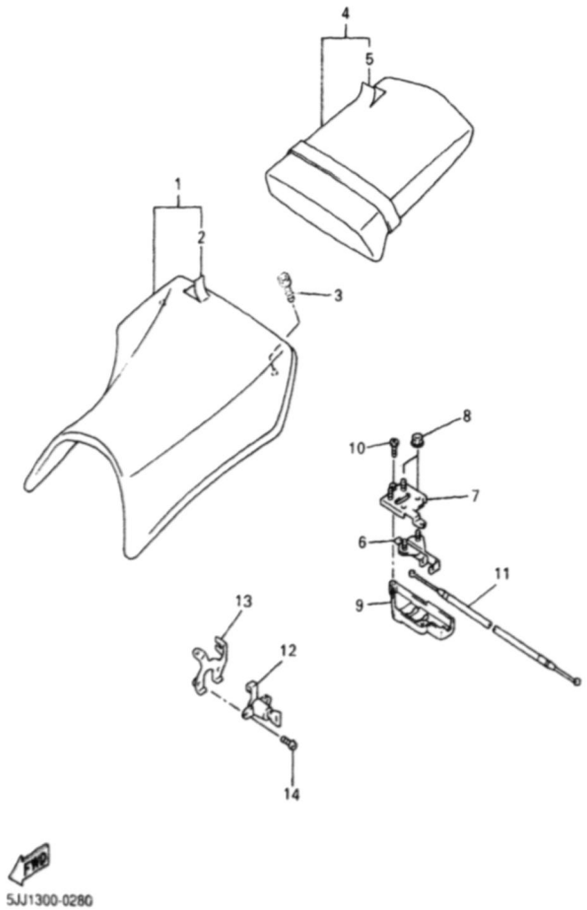

Ref. No.	Part Number	Description	Qty	Remarks
1	5JJ-24710-00-00	SINGLE SEAT ASSY	1	
2	5JJ-2470F-00-00	. COVER, SEAT	1	
3	90110-06258-00	BOLT, HEXAGON SOCKET HEAD	2	
4	5JJ-24750-00-00	TANDEM SEAT ASSY	1	
5	5JJ-24751-00-00	. COVER, TANDEM SEAT	1	
6	4BP-24780-00-00	SEAT LOCK ASSY	1	
7	5JJ-24792-00-00	PLATE	1	
8	95707-06500-00	NUT, FLANGE	4	
9	5JJ-2475X-00-00	COVER, 2	1	
10	97707-40012-00	SCREW, TAPPING	2	
11	5JJ-2478E-00-00	CABLE, SEAT LOCK	1	
12	2TV-W2470-00-00	SEAT LOCK ASSY	1	
13	4XV-2117K-00-00	STAY, LOCK	1	
14	90149-06308-00	SCREW	2	

CONTENTS

AIR INDUCTION SYSTEM	B6
CAMSHAFT. CHAIN	A9
CARBURETOR	B7-8
CLUTCH	C2-3
COWLING 1	E12 ,F1
COWLING 2	F2-4
CRANKCASE	B10
CRANKCASE COVER 1	B11-12
CRANKSHAFT. PISTON	A6
CYLINDER	A5
ELECTRICAL 1	F12 ,G1
ELECTRICAL 2	G2-3
EXHAUST	B9
FENDER	C10-11
FLASHER LIGHT	F7
FRAME	C8-9
FRONT BRAKE CALIPER	D12
FRONT FORK	D5-6
FRONT MASTER CYLINDER	E5-6
FRONT WHEEL	D11
FUEL TANK	D7-9
GENERATOR	F5
HANDLE SWITCH. LEVER	F11
HEADLIGHT	F9
INTAKE	B4-5
METER	F8
OIL CLEANER	B3
OIL PUMP	B2
RADIATOR. HOSE	A12 ,B1
REAR ARM	D1-2
REAR BRAKE CALIPER	E3
REAR MASTER CYLINDER	E10-11
REAR SUSPENSION	D3
REAR WHEEL	E1-2
SEAT	D10
SHIFT CAM. FORK	C6
SHIFT SHAFT	C7
SIDE COVER	C12
STAND. FOOTREST	E7-9
STARTER	C1
STARTING MOTOR	F6
STEERING	D4
STEERING HANDLE. CABLE	E4
TAILLIGHT	F10
TRANSMISSION	C4-5
VALVE	A7-8
WATER PUMP	A10-11

FRONT WHEEL

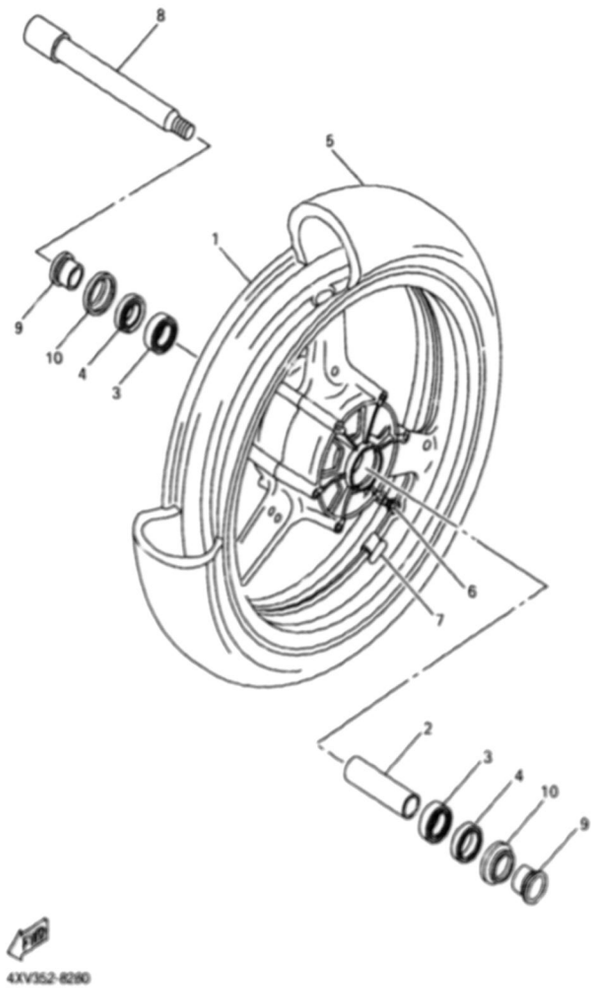

Ref. No.	Part Number	Description	Qty	Remarks
1	4XV-25168-00-33	CAST WHEEL, FRONT	1	YB
2	4XV-25117-00-00	SPACER, BEARING	1	
3	93306-00420-00	BEARING (B6004)	2	
4	93106-28043-00	OIL SEAL	2	
5	94112-17012-00	TIRE (120/70 ZR17 D207F)	1	DUNLOP
6	93900-00030-00	VALVE, RIM	1	
7	29L-25398-00-00	BALANCER, WHEEL (10G)	1	UN
	29L-25398-10-00	BALANCER, WHEEL (20G)	1	UN
	29L-25398-20-00	BALANCER, WHEEL (30G)	1	UN
8	4XV-25181-00-00	AXLE, WHEEL	1	
9	4XV-25186-00-00	COLLAR, WHEEL	2	
10	4XV-25118-00-00	COVER, HUB DUST	2	

CONTENTS

AIR INDUCTION SYSTEM	B6
CAMSHAFT, CHAIN	A9
CARBURETOR	B7-8
CLUTCH	C2-3
COWLING 1	E12 ,F1
COWLING 2	F2-4
CRANKCASE	B10
CRANKCASE COVER 1	B11-12
CRANKSHAFT, PISTON	A6
CYLINDER	A5
ELECTRICAL 1	F12 ,G1
ELECTRICAL 2	G2-3
EXHAUST	B9
FENDER	C10-11
FLASHER LIGHT	F7
FRAME	C8-9
FRONT BRAKE CALIPER	D12
FRONT FORK	D5-6
FRONT MASTER CYLINDER	E5-6
FRONT WHEEL	D11
FUEL TANK	D7-9
GENERATOR	F5
HANDLE SWITCH, LEVER	F11
HEADLIGHT	F9
INTAKE	B4-5
METER	F8
OIL CLEANER	B3
OIL PUMP	B2
RADIATOR, HOSE	A12 ,B1
REAR ARM	D1-2
REAR BRAKE CALIPER	E3
REAR MASTER CYLINDER	E10-11
REAR SUSPENSION	D3
REAR WHEEL	E1-2
SEAT	D10
SHIFT CAM, FORK	C6
SHIFT SHAFT	C7
SIDE COVER	C12
STAND, FOOTREST	E7-9
STARTER	C1
STARTING MOTOR	F6
STEERING	D4
STEERING HANDLE, CABLE	E4
TAILLIGHT	F10
TRANSMISSION	C4-5
VALVE	A7-8
WATER PUMP	A10-11

FRONT BRAKE CALIPER

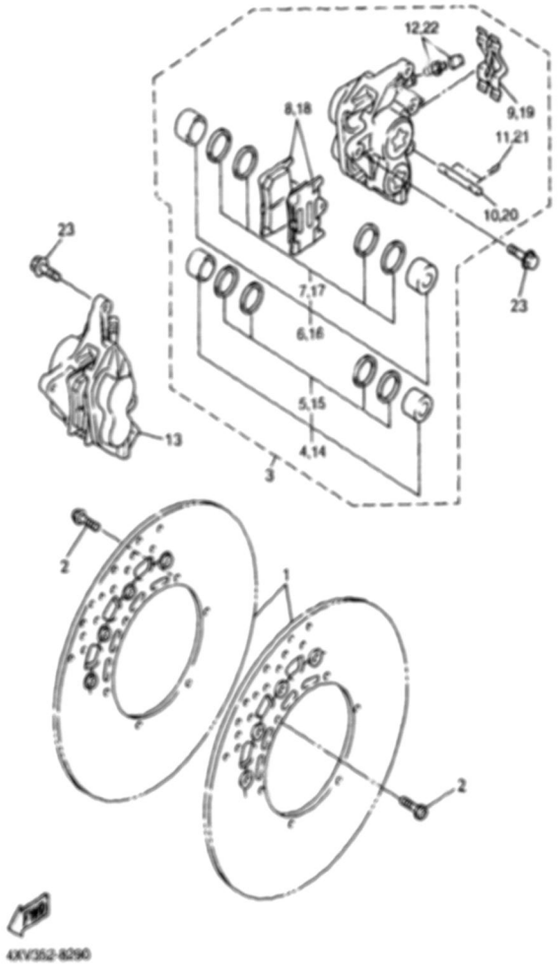

Ref. No.	Part Number	Description	Qty	Remarks
1	5JJ-2581T-00-00	DISC BRAKE ASSY	2	
2	90109-064G6-00	BOLT	12	
3	5JJ-2580T-00-00	CALIPER ASSY (LEFT)	1	
4	4SV-W0057-00-00	. PISTON ASSY, CALIPER	1	
5	3MA-W0047-10-00	. . CALIPER SEAL KIT	1	
6	4SV-W0057-10-00	. PISTON ASSY, CALIPER	1	
7	3GM-W0047-10-00	. . CALIPER SEAL KIT	1	
8	5JJ-W0045-00-00	. BRAKE PAD KIT	1	
9	4SV-25919-00-00	. SUPPORT, PAD	1	
10	4SV-25924-00-00	. PIN, PAD	1	
11	3GM-25925-00-00	. CLIP	2	
12	1J3-W0048-00-00	. BLEED SCREW KIT	1	
13	5JJ-2580U-00-00	CALIPER ASSY (RIGHT)	1	
14	4SV-W0057-00-00	. PISTON ASSY, CALIPER	1	
15	3MA-W0047-10-00	. . CALIPER SEAL KIT	1	
16	4SV-W0057-10-00	. PISTON ASSY, CALIPER	1	
17	3GM-W0047-10-00	. . CALIPER SEAL KIT	1	
18	5JJ-W0045-00-00	. BRAKE PAD KIT	1	
19	4SV-25919-00-00	. SUPPORT, PAD	1	
20	4SV-25924-00-00	. PIN, PAD	1	
21	3GM-25925-00-00	. CLIP	2	
22	1J3-W0048-00-00	. BLEED SCREW KIT	1	
23	90105-105A7-00	BOLT, WASHER BASED	4	

CONTENTS

AIR INDUCTION SYSTEM B6
CAMSHAFT, CHAIN A9
CARBURETOR B7-8
CLUTCH C2-3
COWLING 1 E12 ,F1
COWLING 2 F2-4
CRANKCASE B10
CRANKCASE COVER 1 B11-12
CRANKSHAFT, PISTON A6
CYLINDER A5
ELECTRICAL 1 F12 ,G1
ELECTRICAL 2 G2-3
EXHAUST B9
FENDER C10-11
FLASHER LIGHT F7
FRAME C8-9
FRONT BRAKE CALIPER D12
FRONT FORK D5-6
FRONT MASTER CYLINDER E5-6
FRONT WHEEL D11
FUEL TANK D7-9
GENERATOR F5
HANDLE SWITCH, LEVER F11
HEADLIGHT F9
INTAKE B4-5
METER F8
OIL CLEANER B3
OIL PUMP B2
RADIATOR, HOSE A12 ,B1
REAR ARM D1-2
REAR BRAKE CALIPER E3
REAR MASTER CYLINDER E10-11
REAR SUSPENSION D3
REAR WHEEL E1-2
SEAT D10
SHIFT CAM, FORK C6
SHIFT SHAFT C7
SIDE COVER C12
STAND, FOOTREST E7-9
STARTER C1
STARTING MOTOR F6
STEERING D4
STEERING HANDLE, CABLE E4
TAILLIGHT F10
TRANSMISSION C4-5
VALVE A7-8
WATER PUMP A10-11

REAR WHEEL

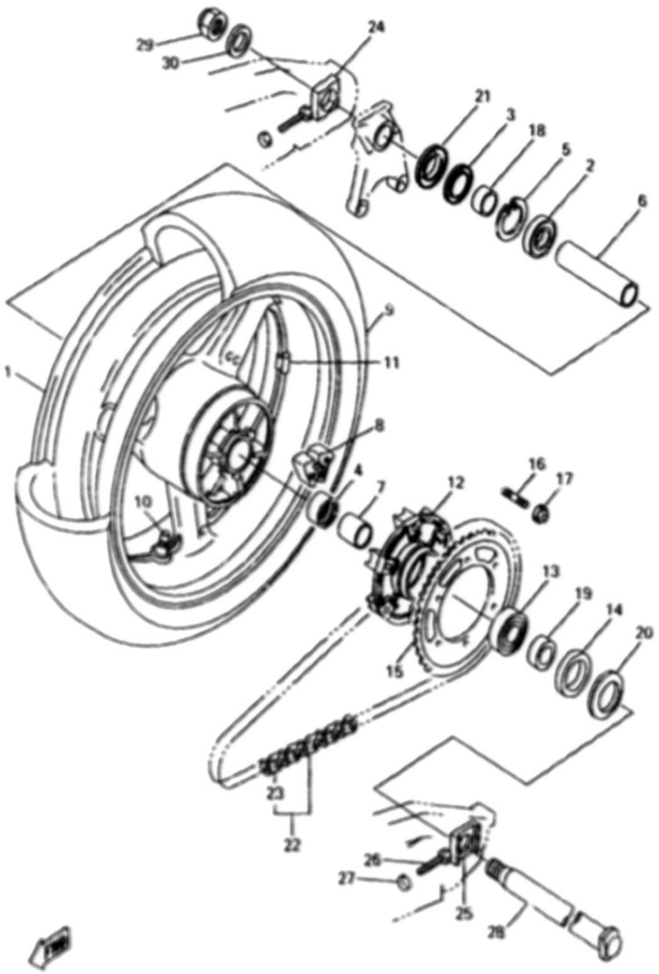

4XV352-8300

Ref. No.	Part Number	Description	Qty	Remarks
1	4XV-25338-00-33	CAST WHEEL, REAR	1	YB
2	93306-07806-00	BEARING	1	
3	93106-35042-00	OIL SEAL	1	
4	93317-43580-00	BEARING	1	
5	99009-52500-00	CIRCLIP	1	
6	4XV-25317-00-00	SPACER, BEARING	1	
7	4XV-25383-00-00	COLLAR, WHEEL	1	
8	4XV-25364-00-00	DAMPER	6	
9	94119-17009-00	TIRE (190/50 ZR17 D207)	1	DUNLOP
10	93900-00030-00	VALVE, RIM	1	
11	29L-25398-00-00	BALANCER, WHEEL (10G)	1	UN
	29L-25398-10-00	BALANCER, WHEEL (20G)	1	UN
	29L-25398-20-00	BALANCER, WHEEL (30G)	1	UN
12	5JJ-25366-00-00	CLUTCH, HUB	1	
13	93306-20531-00	BEARING	1	
14	93106-40013-00	OIL SEAL	1	
15	4XV-25443-20-00	SPROCKET, DRIVEN (43T)	1	
16	90116-10485-00	BOLT, STUD	6	
17	95604-10200-00	NUT, SELF-LOCKING	6	
18	4XV-25377-00-00	COLLAR, WHEEL	1	
19	4XV-25376-00-00	COLLAR, WHEEL	1	
20	5JJ-25367-00-00	COVER, HUB DUST	1	
21	4XV-25327-00-00	COVER, PLATE	1	
22	94581-69114-00	CHAIN (DID50ZVM-114LL)	1	
23	94681-69031-00	. JOINT, CHAIN	1	
24	4XV-25388-00-00	PULLER, CHAIN 1	1	
25	4XV-25389-00-00	PULLER, CHAIN 2	1	
26	90101-08766-00	BOLT	2	
27	95307-08600-00	NUT	2	

CONTINUED ON NEXT FRAME ➤

CONTENTS

AIR INDUCTION SYSTEM	B6
CAMSHAFT, CHAIN	A9
CARBURETOR	B7-8
CLUTCH	C2-3
COWLING 1	E12 ,F1
COWLING 2	F2-4
CRANKCASE	B10
CRANKCASE COVER 1	B11-12
CRANKSHAFT, PISTON	A6
CYLINDER	A5
ELECTRICAL 1	F12 ,G1
ELECTRICAL 2	G2-3
EXHAUST	B9
FENDER	C10-11
FLASHER LIGHT	F7
FRAME	C8-9
FRONT BRAKE CALIPER	D12
FRONT FORK	D5-6
FRONT MASTER CYLINDER	E5-6
FRONT WHEEL	D11
FUEL TANK	D7-9
GENERATOR	F5
HANDLE SWITCH, LEVER	F11
HEADLIGHT	F9
INTAKE	B4-5
METER	F8
OIL CLEANER	B3
OIL PUMP	B2
RADIATOR, HOSE	A12 ,B1
REAR ARM	D1-2
REAR BRAKE CALIPER	E3
REAR MASTER CYLINDER	E10-11
REAR SUSPENSION	D3
REAR WHEEL	E1-2
SEAT	D10
SHIFT CAM, FORK	C6
SHIFT SHAFT	C7
SIDE COVER	C12
STAND, FOOTREST	E7-9
STARTER	C1
STARTING MOTOR	F6
STEERING	D4
STEERING HANDLE, CABLE	E4
TAILLIGHT	F10
TRANSMISSION	C4-5
VALVE	A7-8
WATER PUMP	A10-11

REAR WHEEL

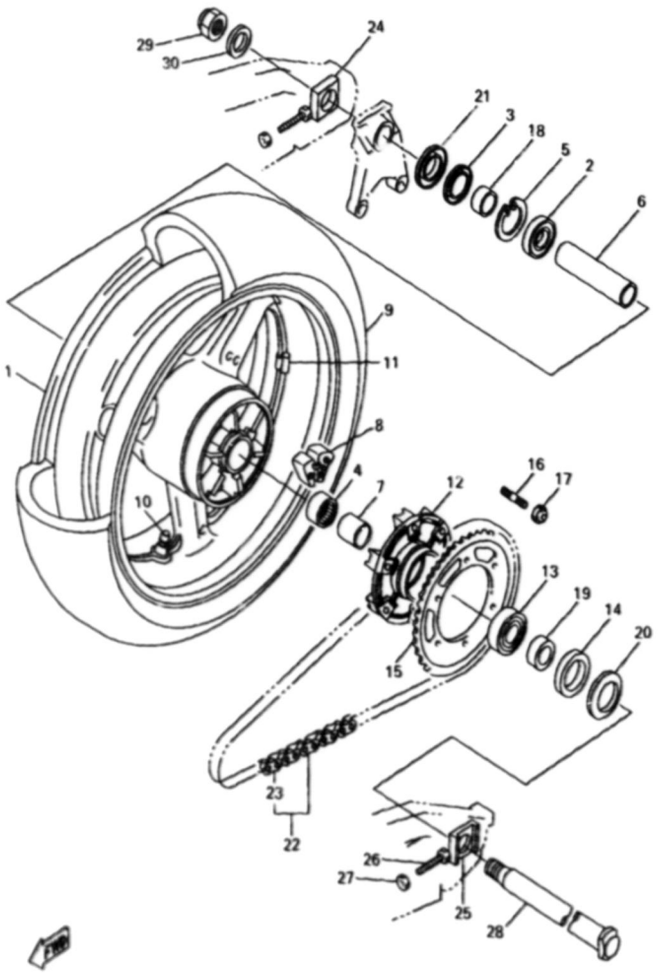

Ref. No.	Part Number	Description	Qty	Remarks
28	4XV-25381-00-00	AXLE, WHEEL	1	
29	90185-24165-00	NUT, SELF-LOCKING	1	
30	90201-257R5-00	WASHER, PLATE	1	

CONTENTS

AIR INDUCTION SYSTEM	B6
CAMSHAFT, CHAIN	A9
CARBURETOR	B7-8
CLUTCH	C2-3
COWLING 1	E12 ,F1
COWLING 2	F2-4
CRANKCASE	B10
CRANKCASE COVER 1	B11-12
CRANKSHAFT, PISTON	A6
CYLINDER	A5
ELECTRICAL 1	F12 ,G1
ELECTRICAL 2	G2-3
EXHAUST	B9
FENDER	C10-11
FLASHER LIGHT	F7
FRAME	C8-9
FRONT BRAKE CALIPER	D12
FRONT FORK	D5-6
FRONT MASTER CYLINDER	E5-6
FRONT WHEEL	D11
FUEL TANK	D7-9
GENERATOR	F5
HANDLE SWITCH, LEVER	F11
HEADLIGHT	F9
INTAKE	B4-5
METER	F8
OIL CLEANER	B3
OIL PUMP	B2
RADIATOR, HOSE	A12 ,B1
REAR ARM	D1-2
REAR BRAKE CALIPER	E3
REAR MASTER CYLINDER	E10-11
REAR SUSPENSION	D3
REAR WHEEL	E1-2
SEAT	D10
SHIFT CAM, FORK	C6
SHIFT SHAFT	C7
SIDE COVER	C12
STAND, FOOTREST	E7-9
STARTER	C1
STARTING MOTOR	F6
STEERING	D4
STEERING HANDLE, CABLE	E4
TAILLIGHT	F10
TRANSMISSION	C4-5
VALVE	A7-8
WATER PUMP	A10-11

REAR BRAKE CALIPER

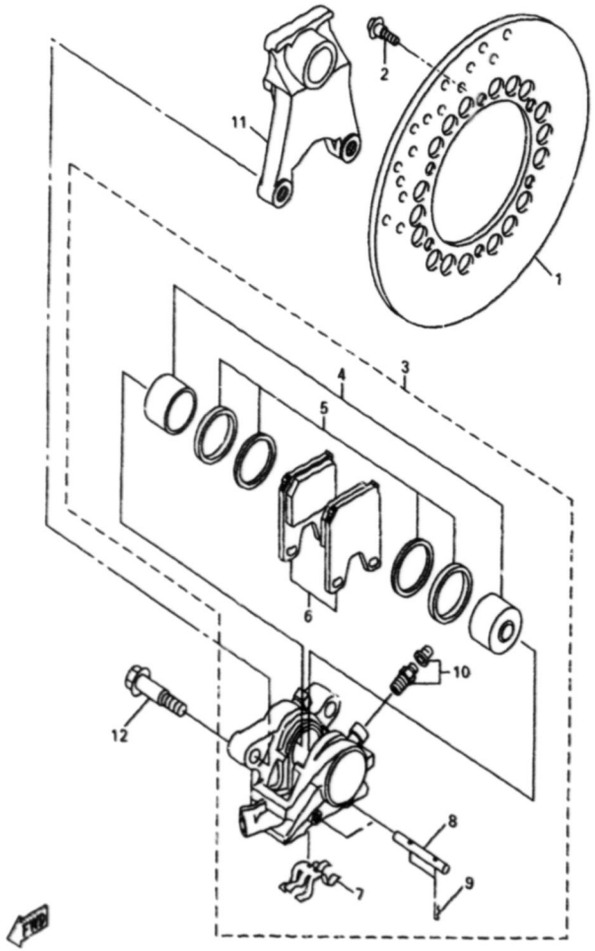

4XV352-8310

Ref. No.	Part Number	Description	Qty	Remarks
1	4XV-2582W-00-00	DISC, REAR BRAKE 2	1	
2	90109-064G6-00	BOLT	6	
3	5JJ-2580W-00-00	CALIPER ASSY, REAR 2	1	
4	4XV-W0057-50-00	. PISTON ASSY, CALIPER	1	
5	4XV-W0047-50-00	.. CALIPER SEAL KIT	1	
6	5FL-W0046-50-00	. BRAKE PAD KIT 2	1	
7	4XV-25919-50-00	. SUPPORT, PAD	1	
8	4SV-25924-00-00	. PIN, PAD	2	
9	3GM-25925-00-00	. CLIP	4	
10	1J3-W0048-00-00	. BLEED SCREW KIT	2	
11	4XV-25819-00-00	BRACKET, CALIPER	1	
12	90105-105A0-00	BOLT, WASHER BASED	2	

CONTENTS

AIR INDUCTION SYSTEM	B6
CAMSHAFT. CHAIN	A9
CARBURETOR	B7-8
CLUTCH	C2-3
COWLING 1	E12 ,F1
COWLING 2	F2-4
CRANKCASE	B10
CRANKCASE COVER 1	B11-12
CRANKSHAFT. PISTON	A6
CYLINDER	A5
ELECTRICAL 1	F12 ,G1
ELECTRICAL 2	G2-3
EXHAUST	B9
FENDER	C10-11
FLASHER LIGHT	F7
FRAME	C8-9
FRONT BRAKE CALIPER	D12
FRONT FORK	D5-6
FRONT MASTER CYLINDER	E5-6
FRONT WHEEL	D11
FUEL TANK	D7-9
GENERATOR	F5
HANDLE SWITCH. LEVER	F11
HEADLIGHT	F9
INTAKE	B4-5
METER	F8
OIL CLEANER	B3
OIL PUMP	B2
RADIATOR. HOSE	A12 ,B1
REAR ARM	D1-2
REAR BRAKE CALIPER	E3
REAR MASTER CYLINDER	E10-11
REAR SUSPENSION	D3
REAR WHEEL	E1-2
SEAT	D10
SHIFT CAM. FORK	C6
SHIFT SHAFT	C7
SIDE COVER	C12
STAND. FOOTREST	E7-9
STARTER	C1
STARTING MOTOR	F6
STEERING	D4
STEERING HANDLE. CABLE	E4
TAILLIGHT	F10
TRANSMISSION	C4-5
VALVE	A7-8
WATER PUMP	A10-11

STEERING HANDLE. CABLE

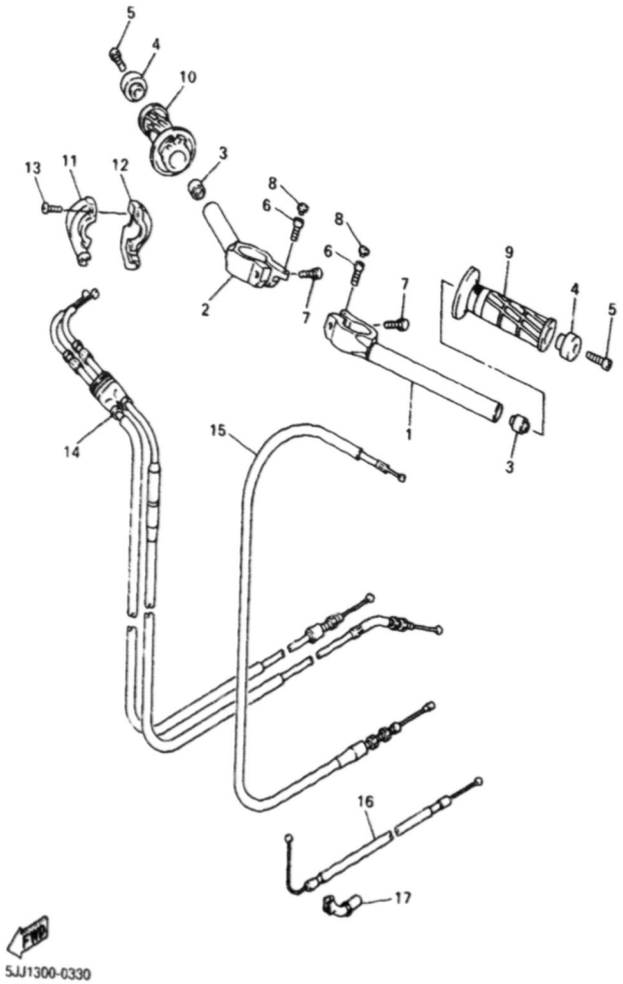

Ref. No.	Part Number	Description	Qty	Remarks
1	4XV-26121-00-00	HANDLEBAR (LEFT)	1	
2	4XV-26122-00-00	HANDLEBAR (RIGHT)	1	
3	4JH-23434-00-00	HOLDER, DAMPER	2	
4	4XV-26246-00-00	END, GRIP	2	
5	91317-06025-00	BOLT	2	
6	91317-06025-00	BOLT	2	
7	91314-08030-00	BOLT	2	
8	2H3-23469-00-00	CAP, BOLT	2	
9	4YR-26241-01-00	GRIP (LEFT)	1	
10	4YR-26240-01-00	GRIP ASSY	1	
11	3XW-26281-01-00	CAP, GRIP UPPER	1	
12	3XW-26282-01-00	CAP, GRIP LOWER	1	
13	98507-05035-00	SCREW, PAN HEAD	2	
14	4XV-26302-01-00	THROTTLE CABLE ASSY	1	
15	5JJ-26335-00-00	CABLE, CLUTCH	1	
16	5JJ-26331-00-00	CABLE, STARTER 1	1	
17	5JJ-26399-00-00	GUIDE, CABLE	1	

CONTENTS

AIR INDUCTION SYSTEM	B6
CAMSHAFT. CHAIN	A9
CARBURETOR	B7-8
CLUTCH	C2-3
COWLING 1	E12 ,F1
COWLING 2	F2-4
CRANKCASE	B10
CRANKCASE COVER 1	B11-12
CRANKSHAFT. PISTON	A6
CYLINDER	A5
ELECTRICAL 1	F12 ,G1
ELECTRICAL 2	G2-3
EXHAUST	B9
FENDER	C10-11
FLASHER LIGHT	F7
FRAME	C8-9
FRONT BRAKE CALIPER	D12
FRONT FORK	D5-6
FRONT MASTER CYLINDER	E5-6
FRONT WHEEL	D11
FUEL TANK	D7-9
GENERATOR	F5
HANDLE SWITCH. LEVER	F11
HEADLIGHT	F9
INTAKE	B4-5
METER	F8
OIL CLEANER	B3
OIL PUMP	B2
RADIATOR. HOSE	A12 ,B1
REAR ARM	D1-2
REAR BRAKE CALIPER	E3
REAR MASTER CYLINDER	E10-11
REAR SUSPENSION	D3
REAR WHEEL	E1-2
SEAT	D10
SHIFT CAM. FORK	C6
SHIFT SHAFT	C7
SIDE COVER	C12
STAND. FOOTREST	E7-9
STARTER	C1
STARTING MOTOR	F6
STEERING	D4
STEERING HANDLE. CABLE	E4
TAILLIGHT	F10
TRANSMISSION	C4-5
VALVE	A7-8
WATER PUMP	A10-11

FRONT MASTER CYLINDER

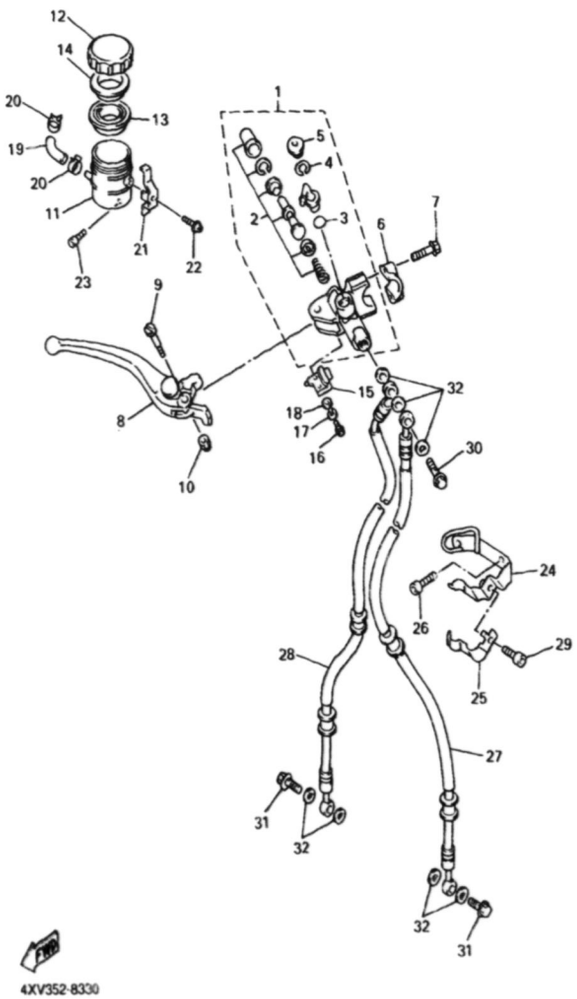

Ref. No.	Part Number	Description	Qty	Remarks
1	5JJ-W2587-00-00	MASTER CYLINDER SUB ASSY	1	
2	5JJ-W0041-00-00	. CYLINDER KIT, MASTER	1	
3	93210-15620-00	. O-RING	1	
4	2VN-25866-00-00	. CIRCLIP	1	
5	3FV-2589A-00-00	. COVER, DUST	1	
6	56A-25867-00-00	BRACKET, MASTER CYLINDER	1	
7	5EB-26332-00-00	BOLT	2	
8	4XV-83922-01-00	LEVER 2	1	
9	3FV-2589F-00-00	BOLT, LEVER	1	
10	95606-06100-00	NUT, U	1	
11	5JJ-25894-10-00	TANK, RESERVOIR	1	
12	3GM-25852-50-00	CAP, RESERVOIR	1	
13	3FV-25854-00-00	DIAPHRAGM, RESERVOIR ...	1	
14	2J2-25855-50-00	BUSH, DIAPHRAGM	1	
15	3FV-83980-00-00	FRONT STOP SWITCH ASSY .	1	
16	98502-04012-00	SCREW, PAN HEAD	1	
17	92902-04100-00	WASHER, SPRING	1	
18	92902-04600-00	WASHER, PLATE	1	
19	3TJ-2582F-01-00	HOSE	1	
20	3PA-24356-00-00	CLIP, PIPE 1	2	
21	3FV-2589G-00-00	HOLDER	1	
22	3GM-2589H-00-00	SCREW	1	
23	91317-06012-00	BOLT	1	
24	4XV-25887-00-00	HOLDER, BRAKE HOSE	1	
25	4XV-2587A-00-00	HOLDER, BREAK HOSE	1	
26	91317-06012-00	BOLT	2	
27	4XV-25872-00-00	HOSE, BRAKE 1	1	
28	4XV-25873-00-00	HOSE, BRAKE 2	1	
29	91317-06010-00	BOLT	1	

CONTINUED ON NEXT FRAME ➤

CONTENTS

AIR INDUCTION SYSTEM	B6
CAMSHAFT. CHAIN	A9
CARBURETOR	B7-8
CLUTCH	C2-3
COWLING 1	E12 ,F1
COWLING 2	F2-4
CRANKCASE	B10
CRANKCASE COVER 1	B11-12
CRANKSHAFT. PISTON	A6
CYLINDER	A5
ELECTRICAL 1	F12 ,G1
ELECTRICAL 2	G2-3
EXHAUST	B9
FENDER	C10-11
FLASHER LIGHT	F7
FRAME	C8-9
FRONT BRAKE CALIPER	D12
FRONT FORK	D5-6
FRONT MASTER CYLINDER	E5-6
FRONT WHEEL	D11
FUEL TANK	D7-9
GENERATOR	F5
HANDLE SWITCH. LEVER	F11
HEADLIGHT	F9
INTAKE	B4-5
METER	F8
OIL CLEANER	B3
OIL PUMP	B2
RADIATOR. HOSE	A12 ,B1
REAR ARM	D1-2
REAR BRAKE CALIPER	E3
REAR MASTER CYLINDER	E10-11
REAR SUSPENSION	D3
REAR WHEEL	E1-2
SEAT	D10
SHIFT CAM. FORK	C6
SHIFT SHAFT	C7
SIDE COVER	C12
STAND. FOOTREST	E7-9
STARTER	C1
STARTING MOTOR	F6
STEERING	D4
STEERING HANDLE. CABLE	E4
TAILLIGHT	F10
TRANSMISSION	C4-5
VALVE	A7-8
WATER PUMP	A10-11

FRONT MASTER CYLINDER

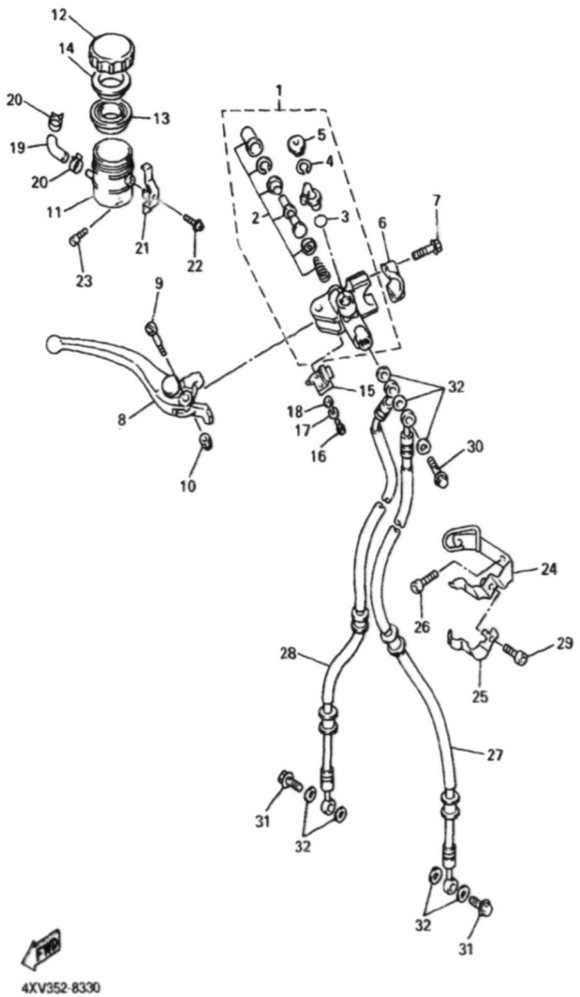

Ref. No.	Part Number	Description	Qty	Remarks
30	90401-10160-00	BOLT, UNION	1	
31	90401-10172-00	BOLT, UNION	2	
32	90201-10118-00	WASHER, PLATE	7	

CONTENTS

AIR INDUCTION SYSTEM B6
CAMSHAFT. CHAIN A9
CARBURETOR B7-8
CLUTCH C2-3
COWLING 1 E12 ,F1
COWLING 2 F2-4
CRANKCASE B10
CRANKCASE COVER 1 B11-12
CRANKSHAFT. PISTON A6
CYLINDER A5
ELECTRICAL 1 F12 ,G1
ELECTRICAL 2 G2-3
EXHAUST B9
FENDER C10-11
FLASHER LIGHT F7
FRAME C8-9
FRONT BRAKE CALIPER D12
FRONT FORK D5-6
FRONT MASTER CYLINDER E5-6
FRONT WHEEL D11
FUEL TANK D7-9
GENERATOR F5
HANDLE SWITCH. LEVER F11
HEADLIGHT F9
INTAKE B4-5
METER F8
OIL CLEANER B3
OIL PUMP B2
RADIATOR. HOSE A12 ,B1
REAR ARM D1-2
REAR BRAKE CALIPER E3
REAR MASTER CYLINDER E10-11
REAR SUSPENSION D3
REAR WHEEL E1-2
SEAT D10
SHIFT CAM. FORK C6
SHIFT SHAFT C7
SIDE COVER C12
STAND. FOOTREST E7-9
STARTER C1
STARTING MOTOR F6
STEERING D4
STEERING HANDLE. CABLE E4
TAILLIGHT F10
TRANSMISSION C4-5
VALVE A7-8
WATER PUMP A10-11

STAND. FOOTREST

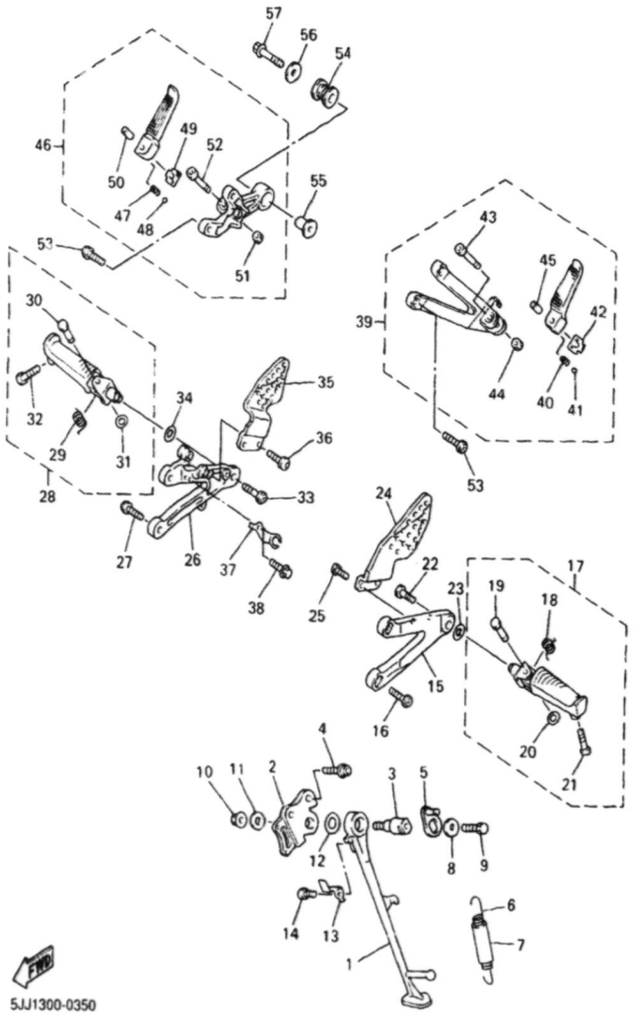

Ref. No.	Part Number	Description	Qty	Remarks
1	4XV-27311-00-00	STAND, SIDE	1	
2	5JJ-27321-00-00	BRACKET, SIDE STAND	1	
3	4NX-27351-00-00	GUIDE, SIDE STAND	1	
4	90109-10002-00	BOLT	2	
5	5EB-27352-00-00	HOOK, SIDE STAND	1	
6	90506-18003-00	SPRING, TENSION	1	
7	90445-19002-00	HOSE	1	
8	90201-081R9-00	WASHER, PLATE	1	
9	90101-08662-00	BOLT	1	
10	95607-10200-00	NUT, SELF-LOCKING	1	
11	90201-101J1-00	WASHER, PLATE	1	
12	90201-146F9-00	WASHER, PLATE	1	
13	5JJ-27315-00-00	LINK, SIDE STAND	1	
14	90110-06226-00	BOLT, HEXAGON SOCKET HEAD	1	
15	5JJ-27442-00-00	BRACKET 2	1	
16	90109-085G6-00	BOLT	2	
17	5JJ-27410-00-00	FRONT FOOTREST ASSY (LEFT)	1	
18	90508-18134-00	. SPRING, TORSION	1	
19	90243-08029-00	. PIN	1	
20	90201-06042-00	. WASHER, PLATE	1	
21	90109-083E0-00	. BOLT	1	
22	90149-08296-00	SCREW	1	
23	90201-13008-00	WASHER, PLATE	1	
24	5JJ-27445-00-00	PLATE 1	1	
25	90149-06233-00	SCREW	2	
26	5JJ-27443-00-00	BRACKET 3	1	
27	90109-085G6-00	BOLT	2	

CONTINUED ON NEXT FRAME ➤

CONTENTS

AIR INDUCTION SYSTEM	B6
CAMSHAFT. CHAIN	A9
CARBURETOR	B7-8
CLUTCH	C2-3
COWLING 1	E12 ,F1
COWLING 2	F2-4
CRANKCASE	B10
CRANKCASE COVER 1	B11-12
CRANKSHAFT. PISTON	A6
CYLINDER	A5
ELECTRICAL 1	F12 ,G1
ELECTRICAL 2	G2-3
EXHAUST	B9
FENDER	C10-11
FLASHER LIGHT	F7
FRAME	C8-9
FRONT BRAKE CALIPER	D12
FRONT FORK	D5-6
FRONT MASTER CYLINDER	E5-6
FRONT WHEEL	D11
FUEL TANK	D7-9
GENERATOR	F5
HANDLE SWITCH. LEVER	F11
HEADLIGHT	F9
INTAKE	B4-5
METER	F8
OIL CLEANER	B3
OIL PUMP	B2
RADIATOR. HOSE	A12 ,B1
REAR ARM	D1-2
REAR BRAKE CALIPER	E3
REAR MASTER CYLINDER	E10-11
REAR SUSPENSION	D3
REAR WHEEL	E1-2
SEAT	D10
SHIFT CAM. FORK	C6
SHIFT SHAFT	C7
SIDE COVER	C12
STAND. FOOTREST	E7-9
STARTER	C1
STARTING MOTOR	F6
STEERING	D4
STEERING HANDLE. CABLE	E4
TAILLIGHT	F10
TRANSMISSION	C4-5
VALVE	A7-8
WATER PUMP	A10-11

STAND. FOOTREST

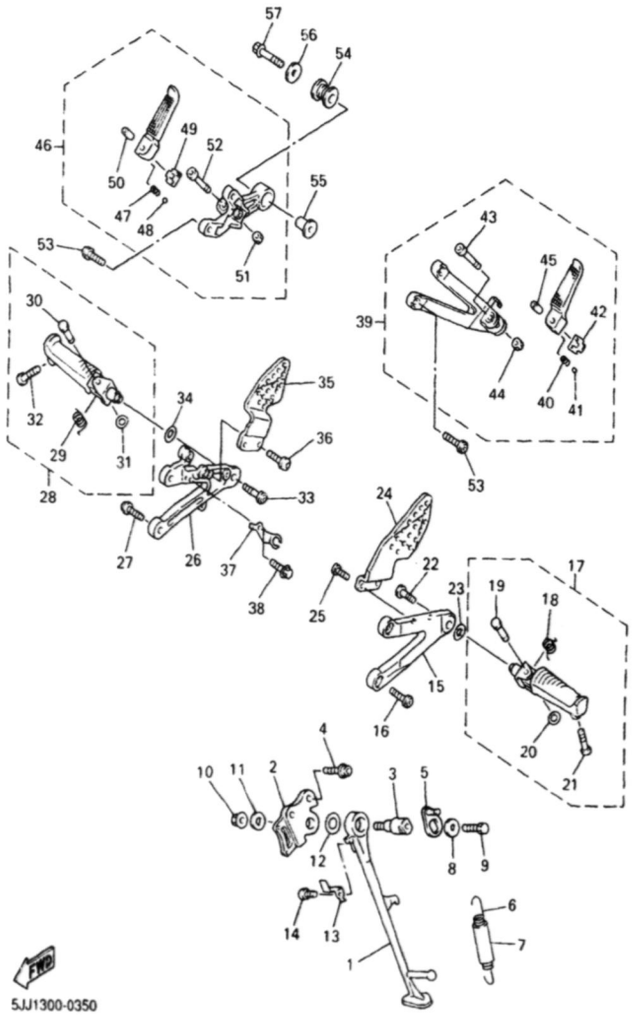

Ref. No.	Part Number	Description	Qty	Remarks
28	5JJ-27420-00-00	FRONT FOOTREST ASSY (RIGHT)	1	
29	90508-18135-00	. SPRING, TORSION	1	
30	90243-08029-00	. PIN	1	
31	90201-06042-00	. WASHER, PLATE	1	
32	90109-083E0-00	. BOLT	1	
33	90109-08296-00	SCREW	1	
34	90201-13008-00	WASHER, PLATE	1	
35	5JJ-27446-00-00	PLATE 2	1	
36	90149-06233-00	SCREW	2	
37	3XV-2144G-00-00	STAY, STOP SWITCH	1	
38	95807-06008-00	BOLT, FLANGE	1	
39	5JJ-27430-00-00	REAR FOOTREST ASSY 1	1	
40	90501-12743-00	. SPRING, COMPRESSION	1	
41	93501-04011-00	. BALL	1	
42	5JJ-27437-00-00	. WASHER, SPECIAL	1	
43	91314-06035-00	. BOLT	1	
44	95604-06200-00	. NUT, U FLANGE	1	
45	90387-06697-00	. COLLAR	1	
46	5JJ-27440-00-00	REAR FOOTREST ASSY 2	1	
47	90501-12743-00	. SPRING, COMPRESSION	1	
48	93501-04011-00	. BALL	1	
49	5JJ-27437-00-00	. WASHER, SPECIAL	1	
50	90387-06697-00	. COLLAR	1	
51	95604-06200-00	. NUT, U FLANGE	1	
52	91314-06035-00	. BOLT	1	
53	90109-085G6-00	BOLT	4	
54	36Y-27424-00-00	DAMPER, FOOTREST 2	1	
55	90387-10001-00	COLLAR	1	

CONTINUED ON NEXT FRAME ➤

CONTENTS

AIR INDUCTION SYSTEM	B6
CAMSHAFT. CHAIN	A9
CARBURETOR	B7-8
CLUTCH	C2-3
COWLING 1	E12 ,F1
COWLING 2	F2-4
CRANKCASE	B10
CRANKCASE COVER 1	B11-12
CRANKSHAFT. PISTON	A6
CYLINDER	A5
ELECTRICAL 1	F12 ,G1
ELECTRICAL 2	G2-3
EXHAUST	B9
FENDER	C10-11
FLASHER LIGHT	F7
FRAME	C8-9
FRONT BRAKE CALIPER	D12
FRONT FORK	D5-6
FRONT MASTER CYLINDER	E5-6
FRONT WHEEL	D11
FUEL TANK	D7-9
GENERATOR	F5
HANDLE SWITCH. LEVER	F11
HEADLIGHT	F9
INTAKE	B4-5
METER	F8
OIL CLEANER	B3
OIL PUMP	B2
RADIATOR. HOSE	A12 ,B1
REAR ARM	D1-2
REAR BRAKE CALIPER	E3
REAR MASTER CYLINDER	E10-11
REAR SUSPENSION	D3
REAR WHEEL	E1-2
SEAT	D10
SHIFT CAM. FORK	C6
SHIFT SHAFT	C7
SIDE COVER	C12
STAND. FOOTREST	E7-9
STARTER	C1
STARTING MOTOR	F6
STEERING	D4
STEERING HANDLE. CABLE	E4
TAILLIGHT	F10
TRANSMISSION	C4-5
VALVE	A7-8
WATER PUMP	A10-11

STAND. FOOTREST

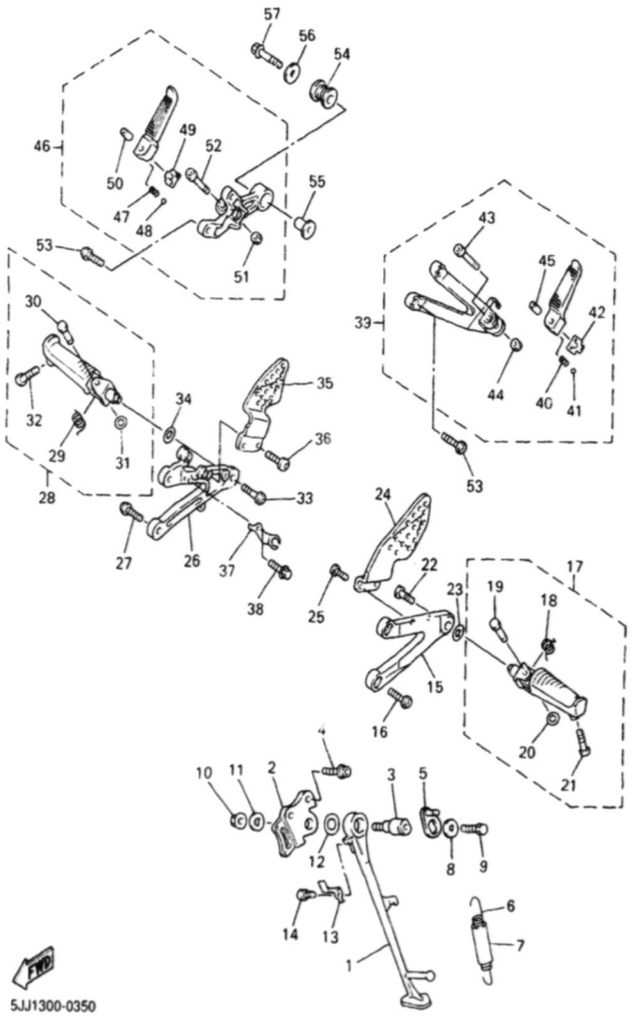

Ref. No.	Part Number	Description	Qty	Remarks
56	90201-10669-00	WASHER, PLATE	1	
57	90105-10022-00	BOLT, WASHER BASED	1	

CONTENTS

AIR INDUCTION SYSTEM	B6
CAMSHAFT. CHAIN	A9
CARBURETOR	B7-8
CLUTCH	C2-3
COWLING 1	E12 ,F1
COWLING 2	F2-4
CRANKCASE	B10
CRANKCASE COVER 1	B11-12
CRANKSHAFT. PISTON	A6
CYLINDER	A5
ELECTRICAL 1	F12 ,G1
ELECTRICAL 2	G2-3
EXHAUST	B9
FENDER	C10-11
FLASHER LIGHT	F7
FRAME	C8-9
FRONT BRAKE CALIPER	D12
FRONT FORK	D5-6
FRONT MASTER CYLINDER	E5-6
FRONT WHEEL	D11
FUEL TANK	D7-9
GENERATOR	F5
HANDLE SWITCH. LEVER	F11
HEADLIGHT	F9
INTAKE	B4-5
METER	F8
OIL CLEANER	B3
OIL PUMP	B2
RADIATOR. HOSE	A12 ,B1
REAR ARM	D1-2
REAR BRAKE CALIPER	E3
REAR MASTER CYLINDER	E10-11
REAR SUSPENSION	D3
REAR WHEEL	E1-2
SEAT	D10
SHIFT CAM. FORK	C6
SHIFT SHAFT	C7
SIDE COVER	C12
STAND. FOOTREST	E7-9
STARTER	C1
STARTING MOTOR	F6
STEERING	D4
STEERING HANDLE. CABLE	E4
TAILLIGHT	F10
TRANSMISSION	C4-5
VALVE	A7-8
WATER PUMP	A10-11

REAR MASTER CYLINDER

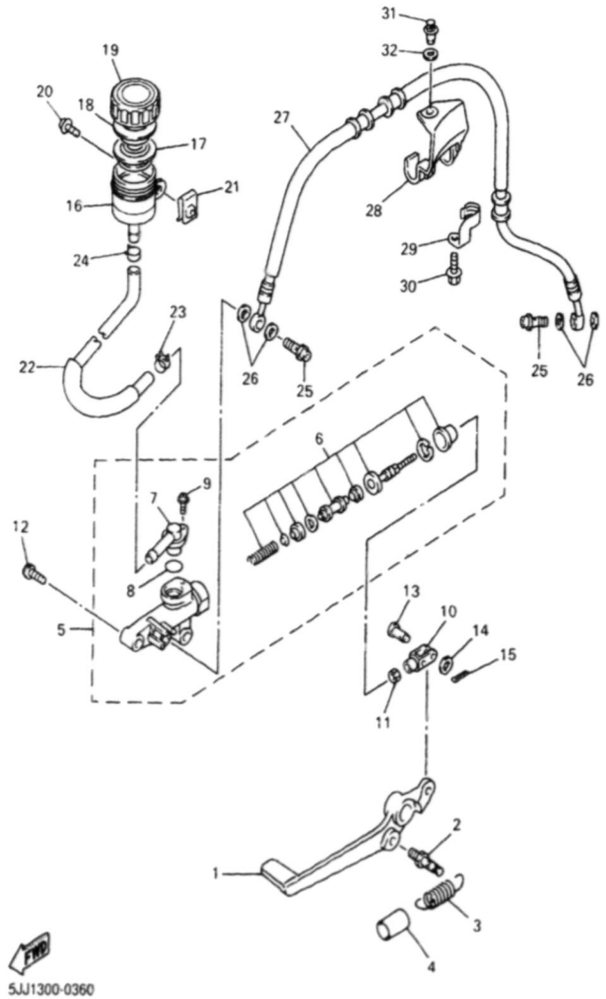

Ref. No.	Part Number	Description	Qty	Remarks
1	5JJ-27211-00-00	PEDAL, BRAKE	1	
2	5JJ-27813-00-00	PIN, PEDAL CRANK	1	
3	90506-20377-00	SPRING, TENSION	1	
4	90446-17346-00	HOSE	1	
5	3TU-2583V-01-00	RR. MASTER CYLINDER ASSY.	1	
6	3TU-W0042-51-00	. CYLINDER KIT, MASTER	1	
7	3LN-2582A-00-00	. JOINT	1	
8	3LN-2585F-00-00	. O-RING	1	
9	3LN-2585H-00-00	. SCREW, SET	1	
10	4XV-27222-01-00	JOINT	1	
11	95304-08700-00	NUT	1	
12	90109-06013-00	BOLT	2	
13	91701-06018-00	PIN, CLEVIS	1	
14	92907-06200-00	WASHER	1	
15	91401-16012-00	PIN, COTTER	1	
16	5JJ-25894-00-00	TANK, RESERVOIR	1	
17	2VN-25854-00-00	DIAPHRAGM, RESERVOIR	1	
18	2VN-25855-00-00	BUSH, DIAPHRAGM	1	
19	3XP-25852-50-00	CAP, RESERVOIR	1	
20	90159-06056-00	SCREW, WITH WASHER	1	
21	90183-06053-00	NUT, SPRING	1	
22	5JJ-25895-00-00	HOSE, RESERVOIR	1	
23	90467-14057-00	CLIP	1	
24	90467-12191-00	CLIP	1	
25	90401-10172-00	BOLT, UNION	2	
26	90201-10118-00	WASHER, PLATE	4	
27	4XV-25874-00-00	HOSE, BRAKE	1	
28	4XV-25886-01-00	HOLDER, BRAKE HOSE	1	
29	4FM-25876-00-00	HOLDER, BRAKE HOSE 2	1	

CONTINUED ON NEXT FRAME ➤

CONTENTS

AIR INDUCTION SYSTEM	B6
CAMSHAFT. CHAIN	A9
CARBURETOR	B7-8
CLUTCH	C2-3
COWLING 1	E12 ,F1
COWLING 2	F2-4
CRANKCASE	B10
CRANKCASE COVER 1	B11-12
CRANKSHAFT. PISTON	A6
CYLINDER	A5
ELECTRICAL 1	F12 ,G1
ELECTRICAL 2	G2-3
EXHAUST	B9
FENDER	C10-11
FLASHER LIGHT	F7
FRAME	C8-9
FRONT BRAKE CALIPER	D12
FRONT FORK	D5-6
FRONT MASTER CYLINDER	E5-6
FRONT WHEEL	D11
FUEL TANK	D7-9
GENERATOR	F5
HANDLE SWITCH. LEVER	F11
HEADLIGHT	F9
INTAKE	B4-5
METER	F8
OIL CLEANER	B3
OIL PUMP	B2
RADIATOR. HOSE	A12 ,B1
REAR ARM	D1-2
REAR BRAKE CALIPER	E3
REAR MASTER CYLINDER	E10-11
REAR SUSPENSION	D3
REAR WHEEL	E1-2
SEAT	D10
SHIFT CAM. FOPK	C6
SHIFT SHAFT	C7
SIDE COVER	C12
STAND. FOOTREST	E7-9
STARTER	C1
STARTING MOTOR	F6
STEERING	D4
STEERING HANDLE. CABLE	E4
TAILLIGHT	F10
TRANSMISSION	C4-5
VALVE	A7-8
WATER PUMP	A10-11

REAR MASTER CYLINDER

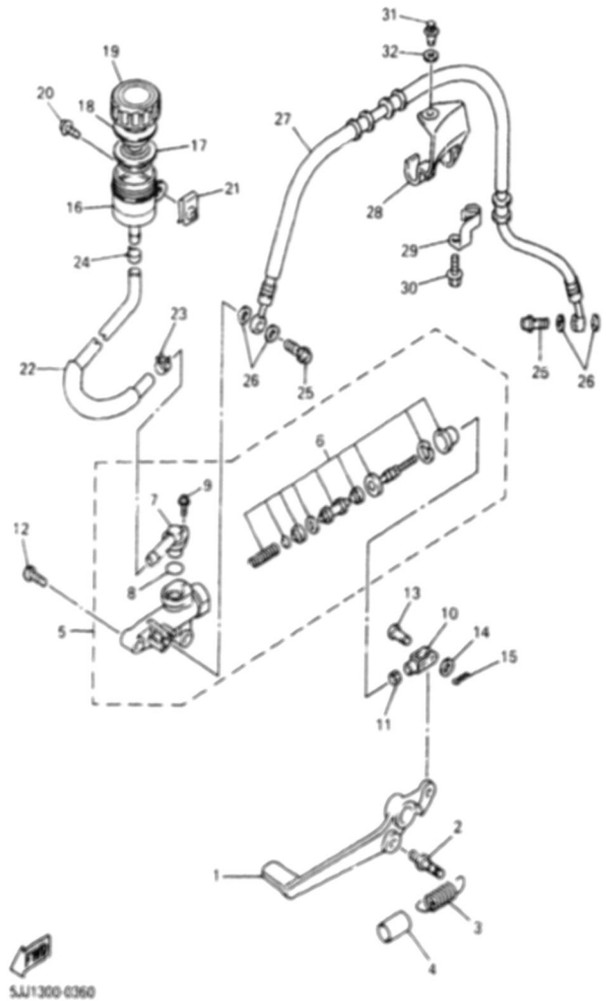

Ref. No.	Part Number	Description	Qty	Remarks
30	95027-06010-00	BOLT, FLANGE	1	
31	90269-08001-00	RIVET	1	
32	5JJ-22332-00-00	DAMPER, CHAIN CASE	1	

CONTENTS

AIR INDUCTION SYSTEM	B6
CAMSHAFT, CHAIN	A9
CARBURETOR	B7-8
CLUTCH	C2-3
COWLING 1	E12 ,F1
COWLING 2	F2-4
CRANKCASE	B10
CRANKCASE COVER 1	B11-12
CRANKSHAFT, PISTON	A6
CYLINDER	A5
ELECTRICAL 1	F12 ,G1
ELECTRICAL 2	G2-3
EXHAUST	B9
FENDER	C10-11
FLASHER LIGHT	F7
FRAME	C8-9
FRONT BRAKE CALIPER	D12
FRONT FORK	D5-6
FRONT MASTER CYLINDER	E5-6
FRONT WHEEL	D11
FUEL TANK	D7-9
GENERATOR	F5
HANDLE SWITCH, LEVER	F11
HEADLIGHT	F9
INTAKE	B4-5
METER	F8
OIL CLEANER	B3
OIL PUMP	B2
RADIATOR, HOSE	A12 ,B1
REAR ARM	D1-2
REAR BRAKE CALIPER	E3
REAR MASTER CYLINDER	E10-11
REAR SUSPENSION	D3
REAR WHEEL	E1-2
SEAT	D10
SHIFT CAM, FORK	C6
SHIFT SHAFT	C7
SIDE COVER	C12
STAND, FOOTREST	E7-9
STARTER	C1
STARTING MOTOR	F6
STEERING	D4
STEERING HANDLE, CABLE	E4
TAILLIGHT	F10
TRANSMISSION	C4-5
VALVE	A7-8
WATER PUMP	A10-11

COWLING 1

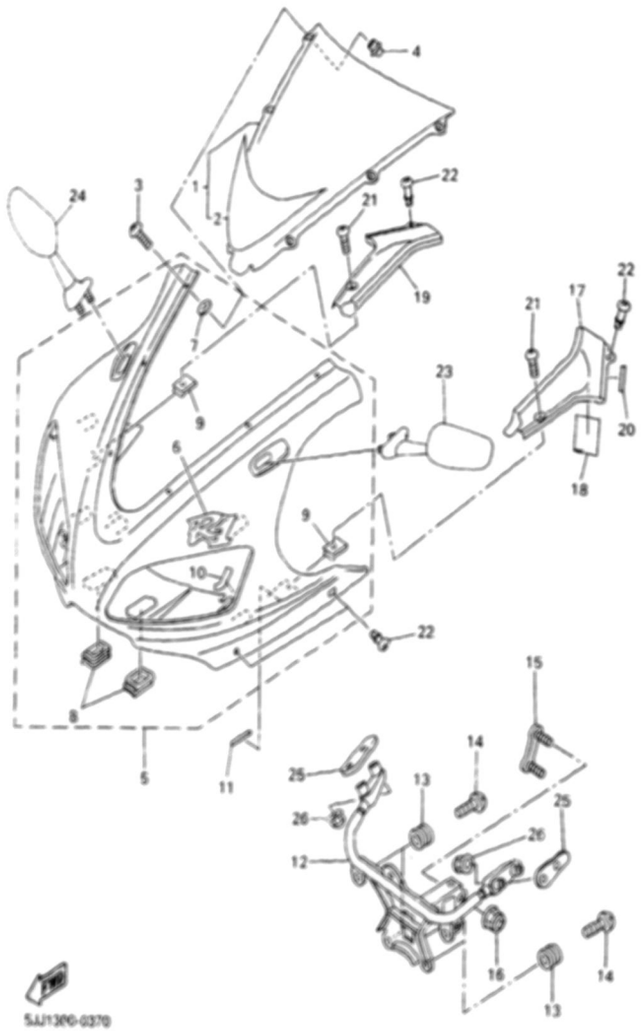

Ref. No.	Part Number	Description	Qty	Remarks
1	5JJ-Y2881-30-00	WINDSHIELD	1	
2	5JJ-2832P-01-00	. GRAPHIC 18	1	
3	90150-05023-00	SCREW, ROUND HEAD	6	
4	90179-05523-00	NUT	6	
5	5JJ-Y283G-00-1X	BODY, FRONT UPPER 1	1	UR DPBMC
	5JJ-Y283G-10-0X	BODY, FRONT UPPER 1	1	UR VRC1/BL2
6	4XV-28315-20-00	. EMBLEM	1	UR FOR VRC1
	4XV-28315-30-00	. EMBLEM	1	UR FOR DPBMC
7	5JJ-2834W-00-00	. PROTECTOR 2	6	
8	4XV-28349-00-00	. CAP	2	
9	90183-05074-00	. NUT, SPRING	2	
10	1LJ-2414J-00-00	DAMPER, PLATE 2	2	
11	4XV-2834E-00-00	DAMPER	2	
12	5JJ-28356-01-00	STAY 1	1	
13	4XV-83513-00-00	DAMPER	4	
14	90164-05014-00	SCREW, TAPPING	4	
15	4XV-28336-00-00	PLATE	1	
16	95607-08200-00	NUT, SELF-LOCKING	2	
17	4XV-2837L-00-00	PANEL, CONSOLE 1	1	
18	1TX-28371-00-00	DAMPER	1	
19	4XV-2837M-00-00	PANEL, CONSOLE 2	1	
20	4EU-24141-00-00	PROTECTOR, FUEL TANK	2	
21	90154-05013-00	SCREW, BINDING	2	
22	3XV-28386-00-00	HEAD	6	
23	5JJ-26280-00-00	REAR VIEW MIRROR ASSY (LEFT)	1	
24	5JJ-26290-00-00	REAR VIEW MIRROR ASSY (RIGHT)	1	
25	4SV-26298-00-00	PLATE, MIRROR FITTING 1	2	

CONTINUED ON NEXT FRAME ➤

CONTENTS

AIR INDUCTION SYSTEM	B6
CAMSHAFT, CHAIN	A9
CARBURETOR	B7-8
CLUTCH	C2-3
COWLING 1	E12 ,F1
COWLING 2	F2-4
CRANKCASE	B10
CRANKCASE COVER 1	B11-12
CRANKSHAFT, PISTON	A6
CYLINDER	A5
ELECTRICAL 1	F12 ,G1
ELECTRICAL 2	G2-3
EXHAUST	B9
FENDER	C10-11
FLASHER LIGHT	F7
FRAME	C8-9
FRONT BRAKE CALIPER	D12
FRONT FORK	D5-6
FRONT MASTER CYLINDER	E5-6
FRONT WHEEL	D11
FUEL TANK	D7-9
GENERATOR	F5
HANDLE SWITCH, LEVER	F11
HEADLIGHT	F9
INTAKE	B4-5
METER	F8
OIL CLEANER	B3
OIL PUMP	B2
RADIATOR, HOSE	A12 ,B1
REAR ARM	D1-2
REAR BRAKE CALIPER	E3
REAR MASTER CYLINDER	E10-11
REAR SUSPENSION	D3
REAR WHEEL	E1-2
SEAT	D10
SHIFT CAM, FORK	C6
SHIFT SHAFT	C7
SIDE COVER	C12
STAND, FOOTREST	E7-9
STARTER	C1
STARTING MOTOR	F6
STEERING	D4
STEERING HANDLE, CABLE	E4
TAILLIGHT	F10
TRANSMISSION	C4-5
VALVE	A7-8
WATER PUMP	A10-11

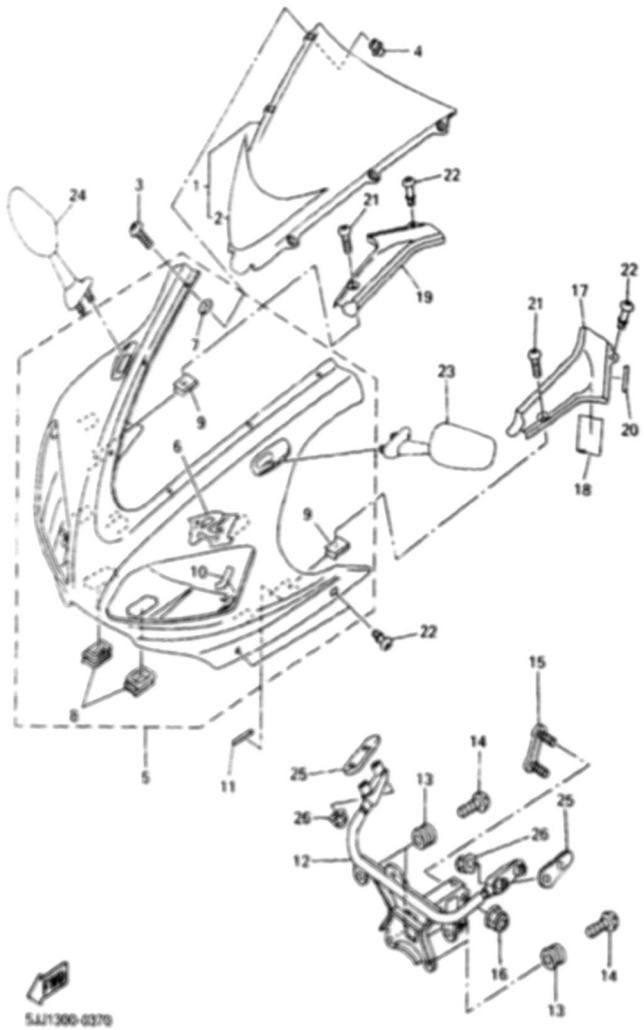

COWLING 1

Ref. No.	Part Number	Description	Qty	Remarks
26	90176-06055-00	NUT, CROWN	4	

CONTENTS

AIR INDUCTION SYSTEM	B6
CAMSHAFT, CHAIN	A9
CARBURETOR	B7-8
CLUTCH	C2-3
COWLING 1	E12 ,F1
COWLING 2	F2-4
CRANKCASE	B10
CRANKCASE COVER 1	B11-12
CRANKSHAFT, PISTON	A6
CYLINDER	A5
ELECTRICAL 1	F12 ,G1
ELECTRICAL 2	G2-3
EXHAUST	B9
FENDER	C10-11
FLASHER LIGHT	F7
FRAME	C8-9
FRONT BRAKE CALIPER	D12
FRONT FORK	D5-6
FRONT MASTER CYLINDER	E5-6
FRONT WHEEL	D11
FUEL TANK	D7-9
GENERATOR	F5
HANDLE SWITCH, LEVER	F11
HEADLIGHT	F9
INTAKE	B4-5
METER	F8
OIL CLEANER	B3
OIL PUMP	B2
RADIATOR, HOSE	A12 ,B1
REAR ARM	D1-2
REAR BRAKE CALIPER	E3
REAR MASTER CYLINDER	E10-11
REAR SUSPENSION	D3
REAR WHEEL	E1-2
SEAT	D10
SHIFT CAM, FORK	C6
SHIFT SHAFT	C7
SIDE COVER	C12
STAND, FOOTREST	E7-9
STARTER	C1
STARTING MOTOR	F6
STEERING	D4
STEERING HANDLE, CABLE	E4
TAILLIGHT	F10
TRANSMISSION	C4-5
VALVE	A7-8
WATER PUMP	A10-11

COWLING 2

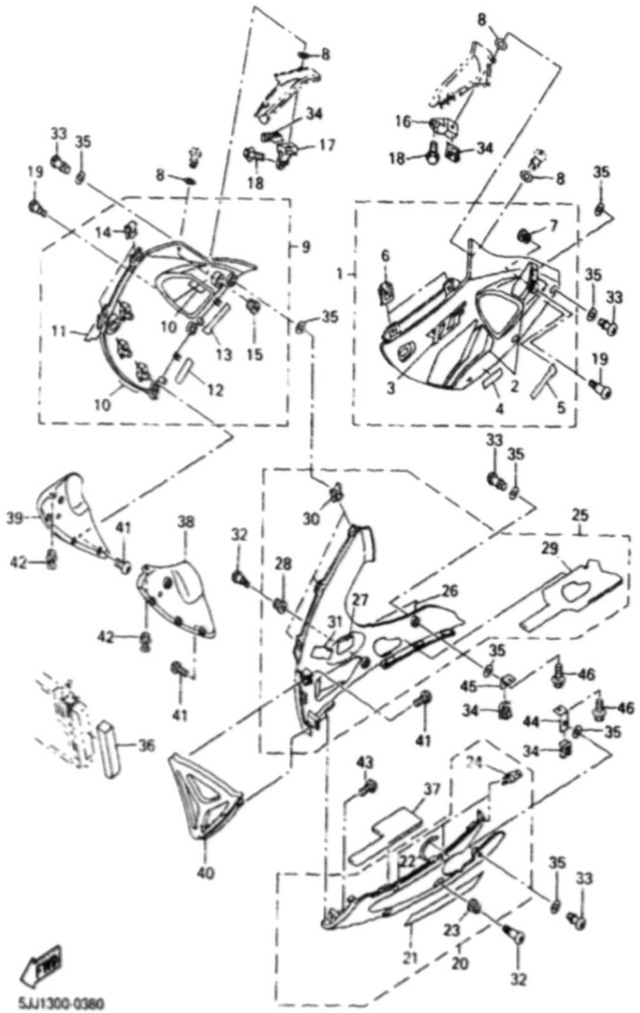

Ref. No.	Part Number	Description	Qty	Remarks
1	4XV-Y283U-40-P1	PANEL ASSEMBLY 1	1	UR DPBMC
	4XV-Y283U-50-1X	PANEL ASSEMBLY 1	1	UR VRC1/BWC1
2	5JJ-28301-00-00	. GRAPHIC SET, LOWER COVER 1	1	UR FOR VRC1
	5JJ-28301-10-00	. GRAPHIC SET, LOWER COVER 1	1	UR FOR DPBMC
3	4XV-2839H-50-00	. EMBLEM 1	1	UR FOR VRC1
	4XV-2839H-60-00	. EMBLEM 1	1	UR FOR DPBMC
4	4XV-28338-20-00	. EMBLEM	1	UR FOR VRC1
	4XV-28338-40-00	. EMBLEM	1	UR FOR DPBMC
5	4XV-28328-20-00	. EMBLEM	1	UR FOR VRC1
	4XV-28328-50-00	. EMBLEM	1	UR FOR DPBMC
6	4XV-2177L-00-00	. PLATE, SPRING	2	
7	90480-13398-00	. GROMMET	1	
8	2TK-21757-00-00	WASHER, SPECIAL 1	12	
9	4XV-Y283V-40-P1	PANEL ASSEMBLY 2	1	UR DPBMC
	4XV-Y283V-50-1X	PANEL ASSEMBLY 2	1	UR VRC1/BWC1
10	5JJ-28303-00-00	. GRAPHIC SET, LOWER COVER 2	1	UR FOR VRC1
	5JJ-28303-10-00	. GRAPHIC SET, LOWER COVER 2	1	UR FOR DPBMC
11	4XV-2839H-50-00	. EMBLEM 1	1	UR FOR VRC1
	4XV-2839H-60-00	. EMBLEM 1	1	UR FOR DPBMC
12	4XV-28338-20-00	. EMBLEM	1	UR FOR VRC1
	4XV-28338-40-00	. EMBLEM	1	UR FOR DPBMC
13	4XV-28328-20-00	. EMBLEM	1	UR FOR VRC1
	4XV-28328-50-00	. EMBLEM	1	UR FOR DPBMC
14	4XV-2177L-00-00	. PLATE, SPRING	2	
15	90480-13398-00	. GROMMET	1	
16	4XV-2836A-00-00	BRACKET 1	1	

CONTINUED ON NEXT FRAME ➤

CONTENTS

AIR INDUCTION SYSTEM	B6
CAMSHAFT, CHAIN	A9
CARBURETOR	B7-8
CLUTCH	C2-3
COWLING 1	E12 ,F1
COWLING 2	F2-4
CRANKCASE	B10
CRANKCASE COVER 1	B11-12
CRANKSHAFT, PISTON	A6
CYLINDER	A5
ELECTRICAL 1	F12 ,G1
ELECTRICAL 2	G2-3
EXHAUST	B9
FENDER	C10-11
FLASHER LIGHT	F7
FRAME	C8-9
FRONT BRAKE CALIPER	D12
FRONT FORK	D5-6
FRONT MASTER CYLINDER	E5-6
FRONT WHEEL	D11
FUEL TANK	D7-9
GENERATOR	F5
HANDLE SWITCH, LEVER	F11
HEADLIGHT	F9
INTAKE	B4-5
METER	F8
OIL CLEANER	B3
OIL PUMP	B2
RADIATOR, HOSE	A12 ,B1
REAR ARM	D1-2
REAR BRAKE CALIPER	E3
REAR MASTER CYLINDER	E10-11
REAR SUSPENSION	D3
REAR WHEEL	E1-2
SEAT	D10
SHIFT CAM, FORK	C6
SHIFT SHAFT	C7
SIDE COVER	C12
STAND, FOOTREST	E7-9
STARTER	C1
STARTING MOTOR	F6
STEERING	D4
STEERING HANDLE, CABLE	E4
TAILLIGHT	F10
TRANSMISSION	C4-5
VALVE	A7-8
WATER PUMP	A10-11

COWLING 2

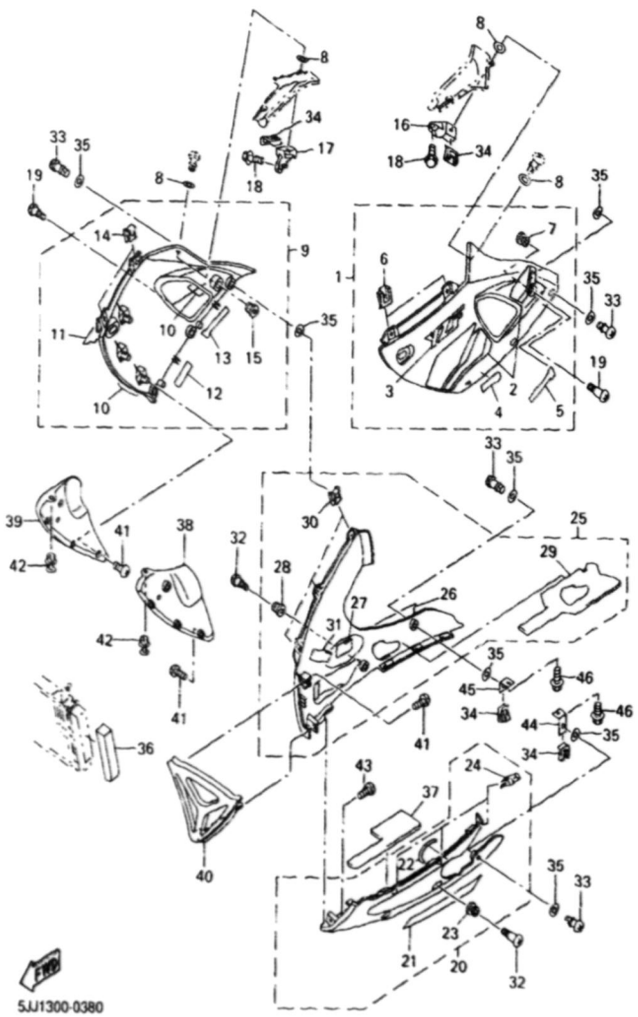

Ref. No.	Part Number	Description	Qty	Remarks
17	4XV-2836E-00-00	BRACKET 2	1	
18	90119-06052-00	BOLT, WITH WASHER	2	
19	90150-06036-00	SCREW, ROUND HEAD	2	
20	5JJ-Y2808-00-4B	COVER ASSY, UNDER	1	BL2 FOR VRC1
	5JJ-Y2808-00-P0	COVER ASSY, UNDER	1	DPBMC
21	99241-00320-00	. EMBLEM, YAMAHA	1	
22	4BR-2834E-00-00	. DAMPER	1	
23	90480-13398-00	. GROMMET	1	
24	4XV-2177L-00-00	. PLATE, SPRING	3	
25	5JJ-Y2809-00-4B	COVER ASSY 2, UNDER	1	BL2 FOR VRC1
	5JJ-Y2809-00-P0	COVER ASSY 2, UNDER	1	DPBMC
26	5JJ-2153E-00-00	. EMBLEM, YAMAHA	1	
27	1TX-28371-00-00	. DAMPER	1	
28	90480-13398-00	. GROMMET	1	
29	5JJ-2848M-00-00	. SEAT 4	1	
30	4XV-2177L-00-00	. PLATE, SPRING	3	
31	1JK-21735-00-00	SEAL 2	1	
32	90150-06036-00	SCREW, ROUND HEAD	2	
33	3XV-28386-00-00	HEAD	8	
34	4XV-2177L-00-00	PLATE, SPRING	4	
35	2TK-21757-00-00	WASHER, SPECIAL 1	16	
36	4SV-28371-00-00	DAMPER	1	
37	5JJ-2848L-00-00	SEAT 3	1	
38	4XV-2836K-10-00	PANEL, INNER 1	1	
39	4XV-2836L-10-00	PANEL, INNER 2	1	
40	4XV-2836M-10-00	PANEL, INNER 3	1	UR FOR VRC1
	4XV-2836M-10-P0	PANEL, INNER 3	1	UR DPBMC
41	97704-40012-00	SCREW, TAPPING	8	
42	90269-07077-00	RIVET	2	

CONTINUED ON NEXT FRAME ➤

CONTENTS

AIR INDUCTION SYSTEM	B6
CAMSHAFT. CHAIN	A9
CARBURETOR	B7-8
CLUTCH	C2-3
COWLING 1	E12 ,F1
COWLING 2	F2-4
CRANKCASE	B10
CRANKCASE COVER 1	B11-12
CRANKSHAFT. PISTON	A6
CYLINDER	A5
ELECTRICAL 1	F12 ,G1
ELECTRICAL 2	G2-3
EXHAUST	B9
FENDER	C10-11
FLASHER LIGHT	F7
FRAME	C8-9
FRONT BRAKE CALIPER	D12
FRONT FORK	D5-6
FRONT MASTER CYLINDER	E5-6
FRONT WHEEL	D11
FUEL TANK	D7-9
GENERATOR	F5
HANDLE SWITCH. LEVER	F11
HEADLIGHT	F9
INTAKE	B4-5
METER	F8
OIL CLEANER	B3
OIL PUMP	B2
RADIATOR. HOSE	A12 ,B1
REAR ARM	D1-2
REAR BRAKE CALIPER	E3
REAR MASTER CYLINDER	E10-11
REAR SUSPENSION	D3
REAR WHEEL	E1-2
SEAT	D10
SHIFT CAM. FORK	C6
SHIFT SHAFT	C7
SIDE COVER	C12
STAND. FOOTREST	E7-9
STARTER	C1
STARTING MOTOR	F6
STEERING	D4
STEERING HANDLE. CABLE	E4
TAILLIGHT	F10
TRANSMISSION	C4-5
VALVE	A7-8
WATER PUMP	A10-11

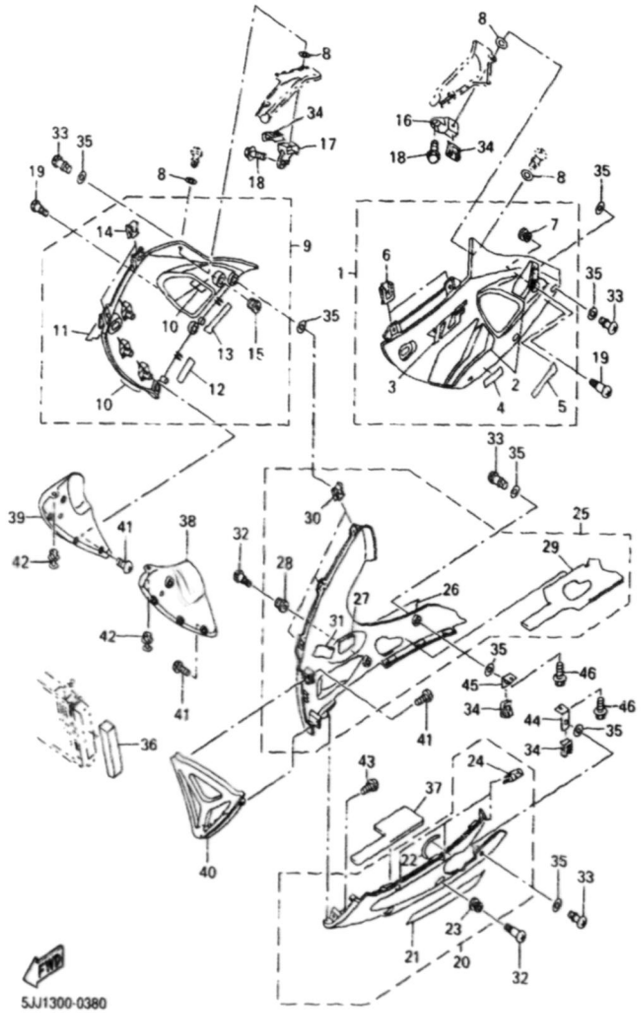

COWLING 2

Ref. No.	Part Number	Description	Qty	Remarks
43	97707-50016-00	SCREW, TAPPING	3	
44	4XV-2836F-00-00	BRACKET 3	1	
45	4XV-2836G-00-00	BRACKET 4	1	
46	95807-06012-00	BOLT, FLANGE	2	

CONTENTS

AIR INDUCTION SYSTEM	B6
CAMSHAFT. CHAIN	A9
CARBURETOR	B7-8
CLUTCH	C2-3
COWLING 1	E12 ,F1
COWLING 2	F2-4
CRANKCASE	B10
CRANKCASE COVER 1	B11-12
CRANKSHAFT. PISTON	A6
CYLINDER	A5
ELECTRICAL 1	F12 ,G1
ELECTRICAL 2	G2-3
EXHAUST	B9
FENDER	C10-11
FLASHER LIGHT	F7
FRAME	C8-9
FRONT BRAKE CALIPER	D12
FRONT FORK	D5-6
FRONT MASTER CYLINDER	E5-6
FRONT WHEEL	D11
FUEL TANK	D7-9
GENERATOR	F5
HANDLE SWITCH. LEVER	F11
HEADLIGHT	F9
INTAKE	B4-5
METER	F8
OIL CLEANER	B3
OIL PUMP	B2
RADIATOR. HOSE	A12 ,B1
REAR ARM	D1-2
REAR BRAKE CALIPER	E3
REAR MASTER CYLINDER	E10-11
REAR SUSPENSION	D3
REAR WHEEL	E1-2
SEAT	D10
SHIFT CAM. FORK	C6
SHIFT SHAFT	C7
SIDE COVER	C12
STAND. FOOTREST	E7-9
STARTER	C1
STARTING MOTOR	F6
STEERING	D4
STEERING HANDLE. CABLE	E4
TAILLIGHT	F10
TRANSMISSION	C4-5
VALVE	A7-8
WATER PUMP	A10-11

GENERATOR

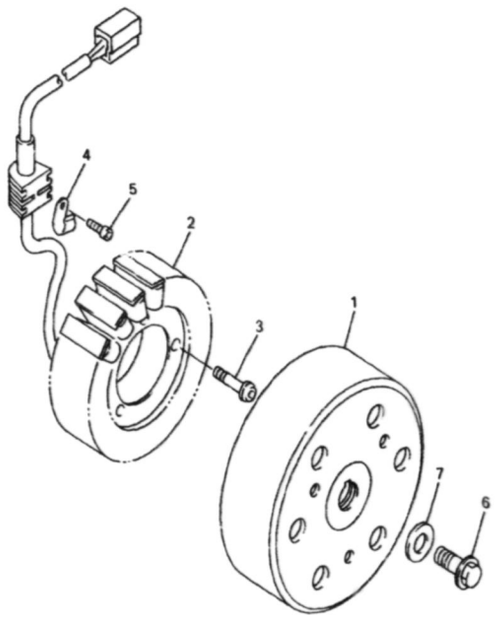

4XV352-8380

Ref. No.	Part Number	Description	Qty	Remarks
1	4XV-81450-00-00	ROTOR ASSY	1	
2	4XV-81410-00-00	STATOR ASSY	1	
3	92017-06030-00	BOLT, BUTTON HEAD	3	
4	90462-10182-00	CLAMP	1	
5	91317-06012-00	BOLT	1	
6	90105-105A6-00	BOLT, WASHER BASED	1	
7	90201-103U7-00	WASHER, PLATE	1	

CONTENTS

AIR INDUCTION SYSTEM	B6
CAMSHAFT. CHAIN	A9
CARBURETOR	B7-8
CLUTCH	C2-3
COWLING 1	E12 ,F1
COWLING 2	F2-4
CRANKCASE	B10
CRANKCASE COVER 1	B11-12
CRANKSHAFT. PISTON	A6
CYLINDER	A5
ELECTRICAL 1	F12 ,G1
ELECTRICAL 2	G2-3
EXHAUST	B9
FENDER	C10-11
FLASHER LIGHT	F7
FRAME	C8-9
FRONT BRAKE CALIPER	D12
FRONT FORK	D5-6
FRONT MASTER CYLINDER	E5-6
FRONT WHEEL	D11
FUEL TANK	D7-9
GENERATOR	F5
HANDLE SWITCH. LEVER	F11
HEADLIGHT	F9
INTAKE	B4-5
METER	F8
OIL CLEANER	B3
OIL PUMP	B2
RADIATOR. HOSE	A12 ,B1
REAR ARM	D1-2
REAR BRAKE CALIPER	E3
REAR MASTER CYLINDER	E10-11
REAR SUSPENSION	D3
REAR WHEEL	E1-2
SEAT	D10
SHIFT CAM. FORK	C6
SHIFT SHAFT	C7
SIDE COVER	C12
STAND. FOOTREST	E7-9
STARTER	C1
STARTING MOTOR	F6
STEERING	D4
STEERING HANDLE. CABLE	E4
TAILLIGHT	F10
TRANSMISSION	C4-5
VALVE	A7-8
WATER PUMP	A10-11

STARTING MOTOR

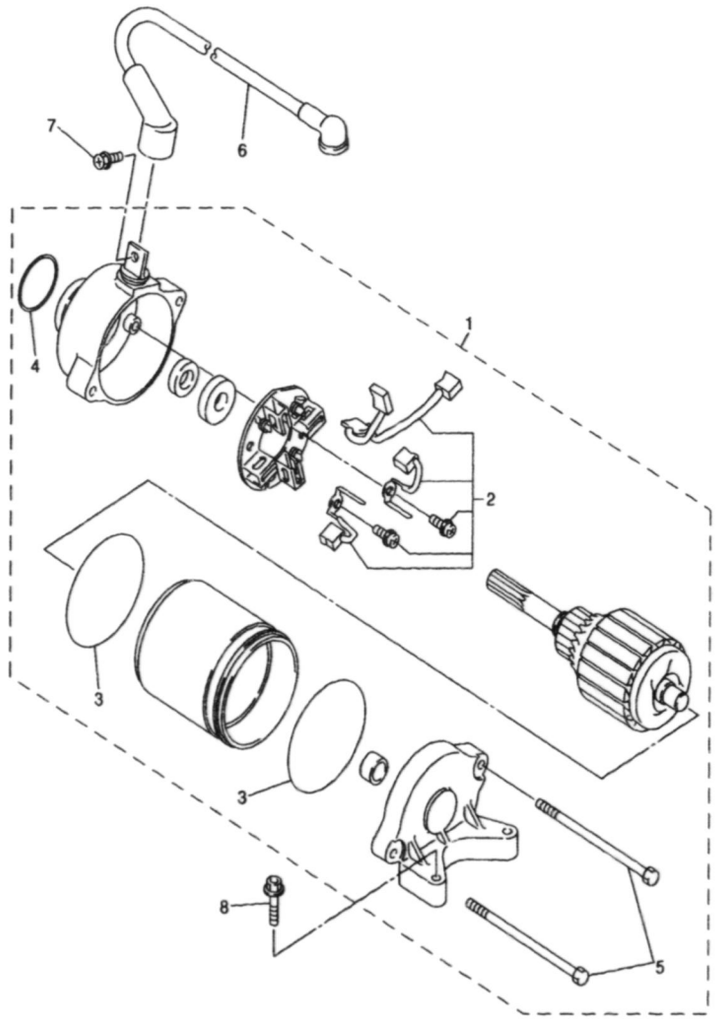

5JJ1300-0400

Ref. No.	Part Number	Description	Qty	Remarks
1	5JJ-81890-00-00	MOTOR ASSY	1	
2	5JJ-81801-00-00	. BRUSH SET	1	
3	93210-55669-00	. O-RING	2	
4	93210-25711-00	. O-RING	1	
5	5JJ-81846-00-00	. SCREW	2	
6	5JJ-8183G-00-00	CORD COMP.	1	
7	5JJ-81828-00-00	BOLT 2	1	
8	95027-06025-00	BOLT, FLANGE	2	

CONTENTS

AIR INDUCTION SYSTEM B6
CAMSHAFT. CHAIN A9
CARBURETOR B7-8
CLUTCH C2-3
COWLING 1 E12 ,F1
COWLING 2 F2-4
CRANKCASE B10
CRANKCASE COVER 1 B11-12
CRANKSHAFT. PISTON A6
CYLINDER A5
ELECTRICAL 1 F12 ,G1
ELECTRICAL 2 G2-3
EXHAUST B9
FENDER C10-11
FLASHER LIGHT F7
FRAME C8-9
FRONT BRAKE CALIPER D12
FRONT FORK D5-6
FRONT MASTER CYLINDER E5-6
FRONT WHEEL D11
FUEL TANK D7-9
GENERATOR F5
HANDLE SWITCH. LEVER F11
HEADLIGHT F9
INTAKE B4-5
METER F8
OIL CLEANER B3
OIL PUMP B2
RADIATOR. HOSE A12 ,B1
REAR ARM D1-2
REAR BRAKE CALIPER E3
REAR MASTER CYLINDER E10-11
REAR SUSPENSION D3
REAR WHEEL E1-2
SEAT D10
SHIFT CAM. FORK C6
SHIFT SHAFT C7
SIDE COVER C12
STAND. FOOTREST E7-9
STARTER C1
STARTING MOTOR F6
STEERING D4
STEERING HANDLE. CABLE E4
TAILLIGHT F10
TRANSMISSION C4-5
VALVE A7-8
WATER PUMP A10-11

FLASHER LIGHT

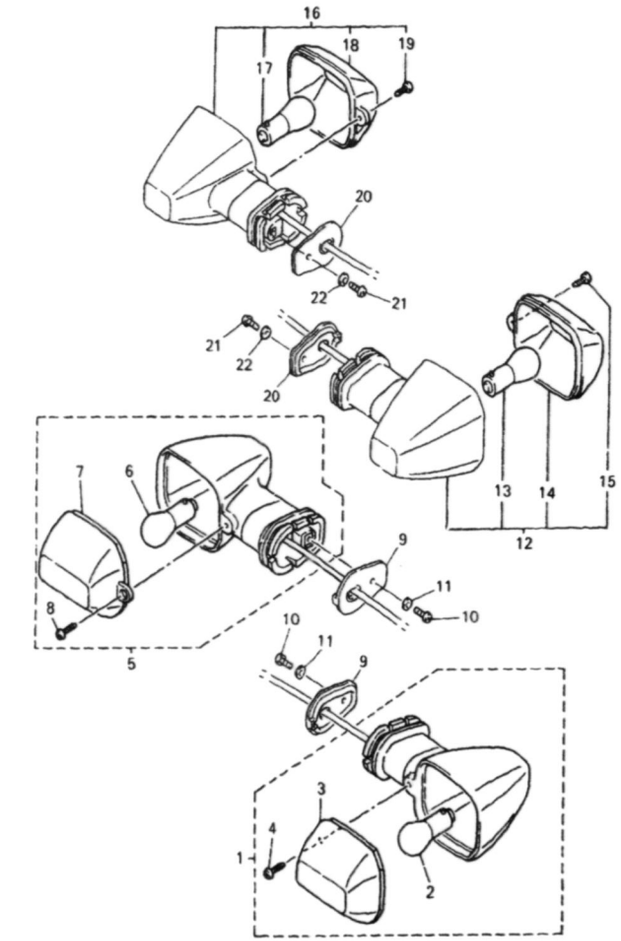

5JJ1300-0410

Ref. No.	Part Number	Description	Qty	Remarks
1	5JJ-83310-10-00	FRONT FLASHER LIGHT ASSY 1	1	
2	256-84714-61-00	. BULB (12V-27/8W)	1	
3	4JH-83332-10-00	. LENS, FLASHER	1	
4	97702-40610-00	. SCREW, TAPPING	1	
5	5JJ-83320-10-00	FRONT FLASHER LIGHT ASSY 2	1	
6	256-84714-61-00	. BULB (12V-27/8W)	1	
7	4JH-83342-10-00	. LENS, FLASHER 2	1	
8	97702-40610-00	. SCREW, TAPPING	1	
9	5JJ-83318-00-00	STAY, FLASHER 1	2	
10	98507-04008-00	SCREW, PAN HEAD	2	
11	92907-04600-00	WASHER	2	
12	5JJ-83330-10-00	REAR FLASHER LIGHT ASSY 1	1	
13	256-83311-70-XX	. BULB (12V-27W)	1	
14	4JH-83342-10-00	. LENS, FLASHER 2	1	
15	97702-40610-00	. SCREW, TAPPING	1	
16	5JJ-83340-10-00	FLASHER LIGHT ASSY 2	1	
17	256-83311-70-XX	. BULB (12V-27W)	1	
18	4JH-83332-10-00	. LENS, FLASHER	1	
19	97702-40610-00	. SCREW, TAPPING	1	
20	5JJ-83318-00-00	STAY, FLASHER 1	2	
21	98507-04008-00	SCREW, PAN HEAD	2	
22	92907-04600-00	WASHER	2	

CONTENTS

AIR INDUCTION SYSTEM B6
CAMSHAFT. CHAIN A9
CARBURETOR B7-8
CLUTCH C2-3
COWLING 1 E12 ,F1
COWLING 2 F2-4
CRANKCASE B10
CRANKCASE COVER 1 B11-12
CRANKSHAFT. PISTON A6
CYLINDER A5
ELECTRICAL 1 F12 ,G1
ELECTRICAL 2 G2-3
EXHAUST B9
FENDER C10-11
FLASHER LIGHT F7
FRAME C8-9
FRONT BRAKE CALIPER D12
FRONT FORK D5-6
FRONT MASTER CYLINDER E5-6
FRONT WHEEL D11
FUEL TANK D7-9
GENERATOR F5
HANDLE SWITCH. LEVER F11
HEADLIGHT F9
INTAKE B4-5
METER F8
OIL CLEANER B3
OIL PUMP B2
RADIATOR. HOSE A12 ,B1
REAR ARM D1-2
REAR BRAKE CALIPER E3
REAR MASTER CYLINDER E10-11
REAR SUSPENSION D3
REAR WHEEL E1-2
SEAT D10
SHIFT CAM. FORK C6
SHIFT SHAFT C7
SIDE COVER C12
STAND. FOOTREST E7-9
STARTER C1
STARTING MOTOR F6
STEERING D4
STEERING HANDLE. CABLE E4
TAILLIGHT F10
TRANSMISSION C4-5
VALVE A7-8
WATER PUMP A10-11

METER

Ref. No.	Part Number	Description	Qty	Remarks
1	5JJ-83500-20-00	SPEEDOMETER ASSY	1	
2	90164-05014-00	SCREW, TAPPING	3	
3	4XV-83513-00-00	DAMPER	3	

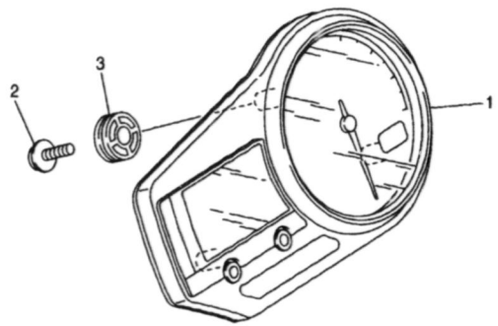

5JJ1300-0420

CONTENTS

AIR INDUCTION SYSTEM	B6
CAMSHAFT. CHAIN	A9
CARBURETOR	B7-8
CLUTCH	C2-3
COWLING 1	E12 ,F1
COWLING 2	F2-4
CRANKCASE	B10
CRANKCASE COVER 1	B11-12
CRANKSHAFT. PISTON	A6
CYLINDER	A5
ELECTRICAL 1	F12 ,G1
ELECTRICAL 2	G2-3
EXHAUST	B9
FENDER	C10-11
FLASHER LIGHT	F7
FRAME	C8-9
FRONT BRAKE CALIPER	D12
FRONT FORK	D5-6
FRONT MASTER CYLINDER	E5-6
FRONT WHEEL	D11
FUEL TANK	D7-9
GENERATOR	F5
HANDLE SWITCH. LEVER	F11
HEADLIGHT	F9
INTAKE	B4-5
METER	F8
OIL CLEANER	B3
OIL PUMP	B2
RADIATOR. HOSE	A12 ,B1
REAR ARM	D1-2
REAR BRAKE CALIPER	E3
REAR MASTER CYLINDER	E10-11
REAR SUSPENSION	D3
REAR WHEEL	E1-2
SEAT	D10
SHIFT CAM. FORK	C6
SHIFT SHAFT	C7
SIDE COVER	C12
STAND. FOOTREST	E7-9
STARTER	C1
STARTING MOTOR	F6
STEERING	D4
STEERING HANDLE. CABLE	E4
TAILLIGHT	F10
TRANSMISSION	C4-5
VALVE	A7-8
WATER PUMP	A10-11

HEADLIGHT

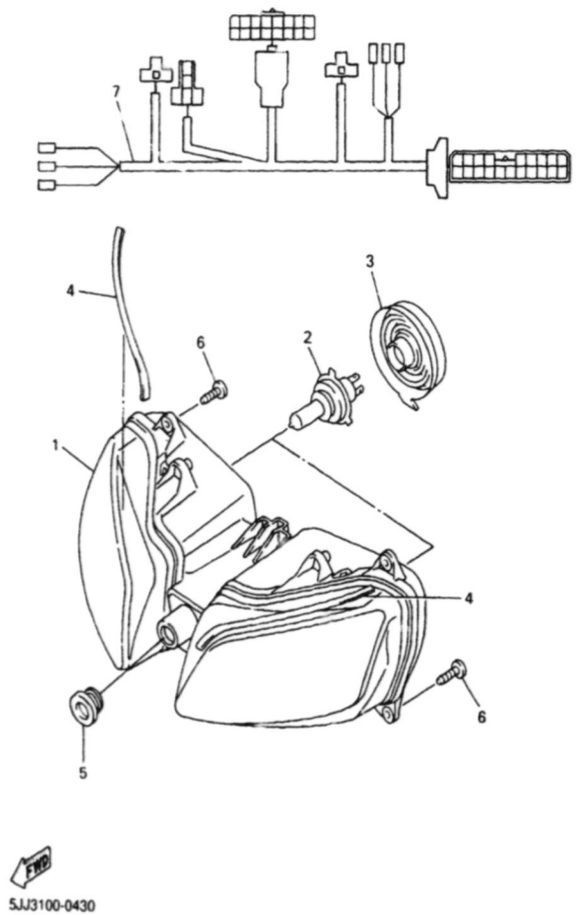

Ref. No.	Part Number	Description	Qty	Remarks
1	5JJ-84310-20-00	HEADLIGHT UNIT ASSY	1	
2	5V2-84314-00-00	BULB (12V-60/55W)	2	
3	4SV-84397-00-00	COVER, SOCKET	2	
4	5JJ-84345-00-00	DAMPER, HEADLIGHT	2	
5	90480-18171-00	GROMMET	1	
6	97707-50016-00	SCREW, TAPPING	4	
7	5JJ-84359-10-00	CORD, HEADLIGHT	1	

CONTENTS

AIR INDUCTION SYSTEM	B6
CAMSHAFT. CHAIN	A9
CARBURETOR	B7-8
CLUTCH	C2-3
COWLING 1	E12 ,F1
COWLING 2	F2-4
CRANKCASE	B10
CRANKCASE COVER 1	B11-12
CRANKSHAFT. PISTON	A6
CYLINDER	A5
ELECTRICAL 1	F12 ,G1
ELECTRICAL 2	G2-3
EXHAUST	B9
FENDER	C10-11
FLASHER LIGHT	F7
FRAME	C8-9
FRONT BRAKE CALIPER	D12
FRONT FORK	D5-6
FRONT MASTER CYLINDER	E5-6
FRONT WHEEL	D11
FUEL TANK	D7-9
GENERATOR	F5
HANDLE SWITCH. LEVER	F11
HEADLIGHT	F9
INTAKE	B4-5
METER	F8
OIL CLEANER	B3
OIL PUMP	B2
RADIATOR. HOSE	A12 ,B1
REAR ARM	D1-2
REAR BRAKE CALIPER	E3
REAR MASTER CYLINDER	E10-11
REAR SUSPENSION	D3
REAR WHEEL	E1-2
SEAT	D10
SHIFT CAM. FORK	C6
SHIFT SHAFT	C7
SIDE COVER	C12
STAND. FOOTREST	E7-9
STARTER	C1
STARTING MOTOR	F6
STEERING	D4
STEERING HANDLE. CABLE	E4
TAILLIGHT	F10
TRANSMISSION	C4-5
VALVE	A7-8
WATER PUMP	A10-11

TAILLIGHT

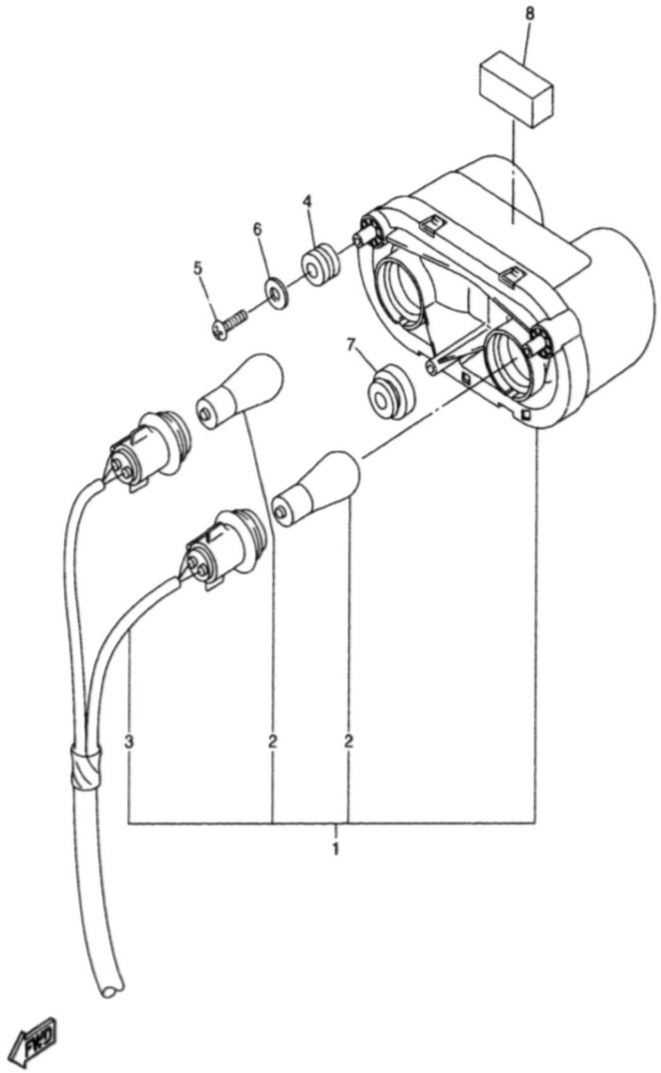

5JJ1300-0440

Ref. No.	Part Number	Description	Qty	Remarks
1	5JJ-84710-10-00	TAILLIGHT UNIT ASSY	1	
2	1A2-84714-41-00	. BULB (12V-21/5W)	2	
3	5JJ-84755-00-00	. CORD ASSY	1	
4	4XV-83513-00-00	DAMPER	2	
5	97707-50016-00	SCREW, TAPPING	2	
6	90201-05725-00	WASHER, PLATE	2	
7	90480-18171-00	GROMMET	1	
8	5JJ-21747-00-00	DAMPER	1	

CONTENTS

AIR INDUCTION SYSTEM	B6
CAMSHAFT. CHAIN	A9
CARBURETOR	B7-8
CLUTCH	C2-3
COWLING 1	E12 ,F1
COWLING 2	F2-4
CRANKCASE	B10
CRANKCASE COVER 1	B11-12
CRANKSHAFT. PISTON	A6
CYLINDER	A5
ELECTRICAL 1	F12 ,G1
ELECTRICAL 2	G2-3
EXHAUST	B9
FENDER	C10-11
FLASHER LIGHT	F7
FRAME	C8-9
FRONT BRAKE CALIPER	D12
FRONT FORK	D5-6
FRONT MASTER CYLINDER	E5-6
FRONT WHEEL	D11
FUEL TANK	D7-9
GENERATOR	F5
HANDLE SWITCH. LEVER	F11
HEADLIGHT	F9
INTAKE	B4-5
METER	F8
OIL CLEANER	B3
OIL PUMP	B2
RADIATOR. HOSE	A12 ,B1
REAR ARM	D1-2
REAR BRAKE CALIPER	E3
REAR MASTER CYLINDER	E10-11
REAR SUSPENSION	D3
REAR WHEEL	E1-2
SEAT	D10
SHIFT CAM. FORK	C6
SHIFT SHAFT	C7
SIDE COVER	C12
STAND. FOOTREST	E7-9
STARTER	C1
STARTING MOTOR	F6
STEERING	D4
STEERING HANDLE. CABLE	E4
TAILLIGHT	F10
TRANSMISSION	C4-5
VALVE	A7-8
WATER PUMP	A10-11

HANDLE SWITCH. LEVER

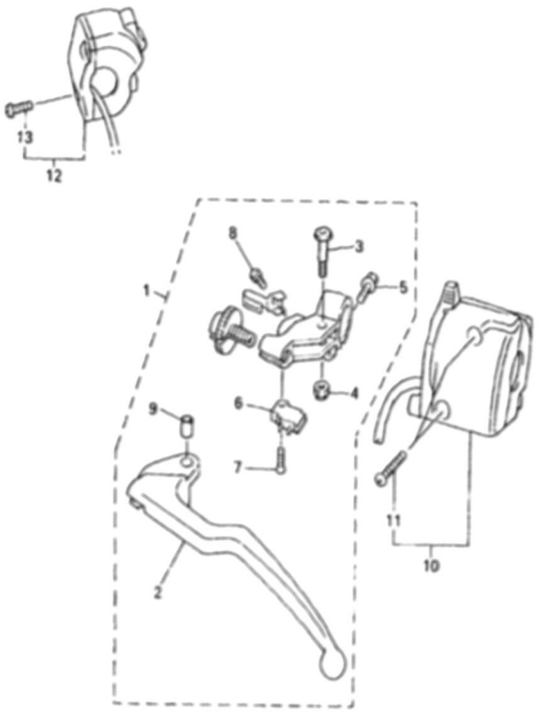

5JJ4110-0450

Ref. No.	Part Number	Description	Qty	Remarks
1	4XV-82910-11-00	LEVER HOLDER ASSY (LEFT)	1	
2	4XV-83912-11-00	. LEVER 1	1	
3	4XV-83945-00-00	. BOLT, LEVER	1	
4	95607-06100-00	. NUT, U	1	
5	95027-06020-00	. BOLT, FLANGE	1	
6	4XV-82917-00-00	. SWITCH	1	
7	98707-03016-00	. SCREW, FLAT HEAD	1	
8	98507-04010-00	. SCREW, PAN HEAD	1	
9	5JJ-83913-00-00	. COLLAR, LEVER 1	1	
10	5JJ-83973-00-00	SWITCH, HANDLE 3	1	
11	98507-05025-00	. SCREW, PAN HEAD	2	
12	4UN-83975-01-00	SWITCH, HANDLE 2	1	
13	98507-05022-00	. SCREW, PAN HEAD	2	

CONTENTS

AIR INDUCTION SYSTEM	B6
CAMSHAFT. CHAIN	A9
CARBURETOR	B7-8
CLUTCH	C2-3
COWLING 1	E12 ,F1
COWLING 2	F2-4
CRANKCASE	B10
CRANKCASE COVER 1	B11-12
CRANKSHAFT. PISTON	A6
CYLINDER	A5
ELECTRICAL 1	F12 ,G1
ELECTRICAL 2	G2-3
EXHAUST	B9
FENDER	C10-11
FLASHER LIGHT	F7
FRAME	C8-9
FRONT BRAKE CALIPER	D12
FRONT FORK	D5-6
FRONT MASTER CYLINDER	E5-6
FRONT WHEEL	D11
FUEL TANK	D7-9
GENERATOR	F5
HANDLE SWITCH. LEVER	F11
HEADLIGHT	F9
INTAKE	B4-5
METER	F8
OIL CLEANER	B3
OIL PUMP	B2
RADIATOR. HOSE	A12 ,B1
REAR ARM	D1-2
REAR BRAKE CALIPER	E3
REAR MASTER CYLINDER	E10-11
REAR SUSPENSION	D3
REAR WHEEL	E1-2
SEAT	D10
SHIFT CAM. FORK	C6
SHIFT SHAFT	C7
SIDE COVER	C12
STAND. FOOTREST	E7-9
STARTER	C1
STARTING MOTOR	F6
STEERING	D4
STEERING HANDLE. CABLE	E4
TAILLIGHT	F10
TRANSMISSION	C4-5
VALVE	A7-8
WATER PUMP	A10-11

ELECTRICAL 1

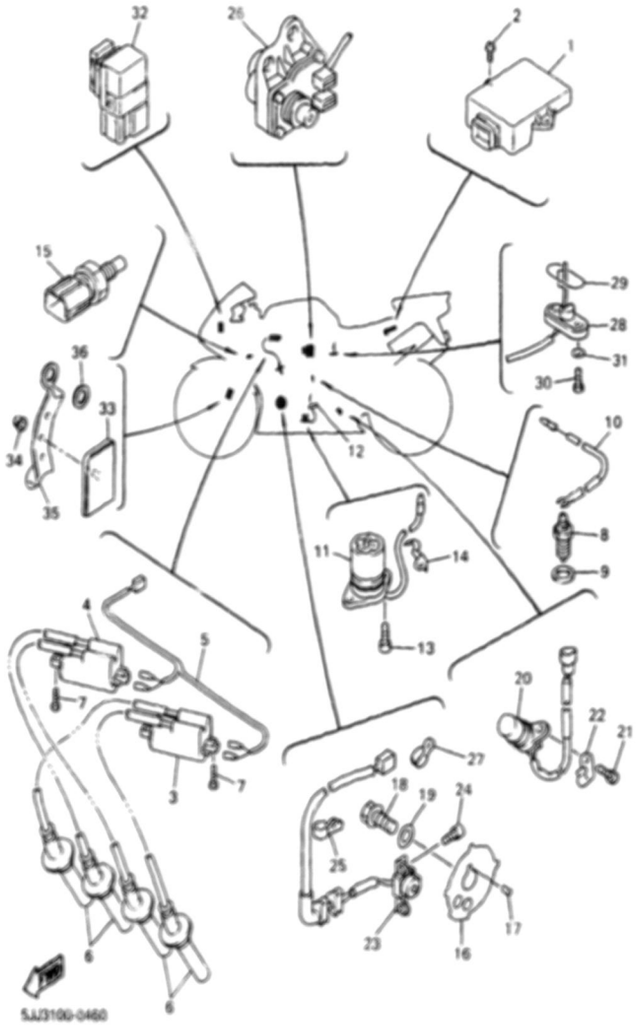

Ref. No.	Part Number	Description	Qty	Remarks
1	5JJ-82305-30-00	IGNITOR UNIT ASSY	1	(5JJ4)
	5JJ-82305-40-00	IGNITOR UNIT ASSY	1	()
2	97707-50016-00	SCREW, TAPPING	2	
3	4XV-82310-00-00	IGNITION COIL ASSY	1	
4	4XV-82320-00-00	IGNITION COIL ASSY	1	
5	4XV-82309-00-00	WIRE, SUB LEAD	1	
6	4XV-82370-00-00	PLUG CAP ASSY	4	
7	97707-60025-00	SCREW, TAPPING	4	
8	3GB-82540-01-00	NEUTRAL SWITCH ASSY	1	
9	90430-10148-00	GASKET	1	
10	5JJ-82541-00-00	WIRE, LEAD	1	
11	4XV-85720-01-00	OIL LEVEL GAUGE ASSY	1	
12	5Y9-12491-00-00	CLAMP 1	1	
13	91317-06014-00	BOLT	2	
14	90465-08013-00	CLAMP	1	
15	5JJ-83591-00-00	THERMO UNIT	1	
16	4XV-81673-00-00	ROTOR	1	
17	93604-29151-00	PIN, DOWEL	1	
18	90105-10290-00	BOLT, WASHER BASED	1	
19	90201-107K6-00	WASHER, PLATE	1	
20	4XV-83755-01-00	SENSOR, SPEED	1	
21	91317-06014-00	BOLT	1	
22	90465-08028-00	CLAMP	1	
23	4XV-81670-10-00	PICK-UP ASSY	1	
24	91317-06012-00	BOLT	2	
25	90465-08191-00	CLAMP	1	
26	4FM-85820-01-00	SERVO MOTOR ASSY	1	
27	90462-08225-00	CLAMP	1	
28	1UF-85752-02-00	SENDER UNIT ASSY, FUEL METER	1	

CONTINUED ON NEXT FRAME ➤

CONTENTS

AIR INDUCTION SYSTEM	B6
CAMSHAFT, CHAIN	A9
CARBURETOR	B7-8
CLUTCH	C2-3
COWLING 1	E12 ,F1
COWLING 2	F2-4
CRANKCASE	B10
CRANKCASE COVER 1	B11-12
CRANKSHAFT, PISTON	A6
CYLINDER	A5
ELECTRICAL 1	F12 ,G1
ELECTRICAL 2	G2-3
EXHAUST	B9
FENDER	C10-11
FLASHER LIGHT	F7
FRAME	C8-9
FRONT BRAKE CALIPER	D12
FRONT FORK	D5-6
FRONT MASTER CYLINDER	E5-6
FRONT WHEEL	D11
FUEL TANK	D7-9
GENERATOR	F5
HANDLE SWITCH, LEVER	F11
HEADLIGHT	F9
INTAKE	B4-5
METER	F8
OIL CLEANER	B3
OIL PUMP	B2
RADIATOR, HOSE	A12 ,B1
REAR ARM	D1-2
REAR BRAKE CALIPER	E3
REAR MASTER CYLINDER	E10-11
REAR SUSPENSION	D3
REAR WHEEL	E1-2
SEAT	D10
SHIFT CAM, FORK	C6
SHIFT SHAFT	C7
SIDE COVER	C12
STAND, FOOTREST	E7-9
STARTER	C1
STARTING MOTOR	F6
STEERING	D4
STEERING HANDLE, CABLE	E4
TAILLIGHT	F10
TRANSMISSION	C4-5
VALVE	A7-8
WATER PUMP	A10-11

ELECTRICAL 1

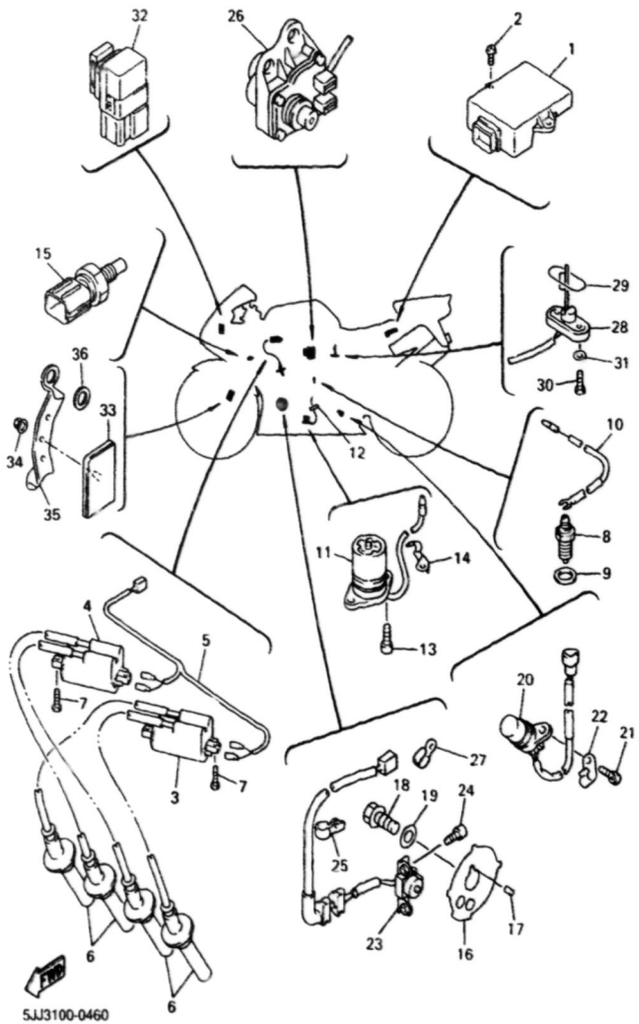

Ref. No.	Part Number	Description	Qty	Remarks
29	42X-85753-00-00	GASKET, SENDER UNIT	1	
30	90149-06011-00	SCREW	2	
31	90202-05193-00	WASHER, PLATE	2	
32	5JJ-81950-10-00	RELAY ASSY	1	
33	20G-85110-00-00	REFLECTOR ASSY	2	
34	95707-05500-00	NUT, FLANGE	2	
35	4XV-85112-00-00	BRACKET, REFLECTOR 1	2	
36	90201-08759-00	WASHER, PLATE	4	

CONTENTS

AIR INDUCTION SYSTEM	B6
CAMSHAFT. CHAIN	A9
CARBURETOR	B7-8
CLUTCH	C2-3
COWLING 1	E12 ,F1
COWLING 2	F2-4
CRANKCASE	B10
CRANKCASE COVER 1	B11-12
CRANKSHAFT. PISTON	A6
CYLINDER	A5
ELECTRICAL 1	F12 ,G1
ELECTRICAL 2	G2-3
EXHAUST	B9
FENDER	C10-11
FLASHER LIGHT	F7
FRAME	C8-9
FRONT BRAKE CALIPER	D12
FRONT FORK	D5-6
FRONT MASTER CYLINDER	E5-6
FRONT WHEEL	D11
FUEL TANK	D7-9
GENERATOR	F5
HANDLE SWITCH. LEVER	F11
HEADLIGHT	F9
INTAKE	B4-5
METER	F8
OIL CLEANER	B3
OIL PUMP	B2
RADIATOR. HOSE	A12 ,B1
REAR ARM	D1-2
REAR BRAKE CALIPER	E3
REAR MASTER CYLINDER	E10-11
REAR SUSPENSION	D3
REAR WHEEL	E1-2
SEAT	D10
SHIFT CAM. FORK	C6
SHIFT SHAFT	C7
SIDE COVER	C12
STAND. FOOTREST	E7-9
STARTER	C1
STARTING MOTOR	F6
STEERING	D4
STEERING HANDLE. CABLE	E4
TAILLIGHT	F10
TRANSMISSION	C4-5
VALVE	A7-8
WATER PUMP	A10-11

ELECTRICAL 2

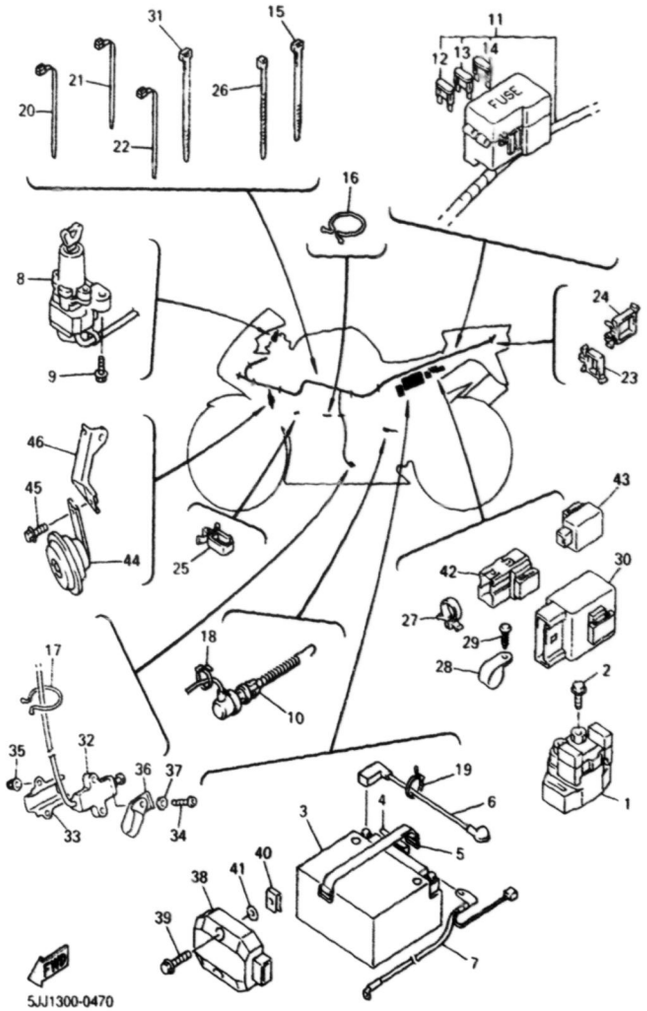

Ref. No.	Part Number	Description	Qty	Remarks
1	4YR-81940-00-00	STARTER RELAY ASSY	1	
2	95027-06008-00	BOLT, FLANGE	2	
3	4TX-82100-01-00	BATTERY ASSY (GT12B-4)	1	
4	2AL-84553-00-00	DAMPER	1	
5	5JJ-82131-00-00	BAND, BATTERY	1	
6	5JJ-82115-00-00	WIRE, PLUS LEAD	1	
7	5JJ-82116-00-00	WIRE, MINUS LEAD	1	
8	5JJ-82501-11-00	MAIN SWITCH STEERING LOCK	1	
9	90109-080G5-00	BOLT	2	
10	4XV-82530-01-00	STOP SWITCH ASSY	1	
11	5JJ-82590-10-00	WIRE HARNESS ASSY	1	
12	5JJ-82151-30-00	. FUSE (10A-BL)	3	
13	5JJ-82151-10-00	. FUSE (15A-BL)	2	
14	5JJ-82151-20-00	. FUSE (20A-BL)	3	
15	90464-12036-00	CLAMP	4	
16	90464-37257-00	CLAMP	1	
17	90464-16039-00	CLAMP	2	
18	5Y9-12491-00-00	CLAMP 1	1	
19	90464-13077-00	CLAMP	2	
20	90464-13073-00	CLAMP	5	
21	90464-15195-00	CLAMP	3	
22	90464-12036-00	CLAMP	1	
23	90464-16021-00	CLAMP	1	
24	90464-16025-00	CLAMP	1	
25	90464-15157-00	CLAMP	1	
26	90465-13275-00	CLAMP	1	
27	90464-13133-00	CLAMP	2	
28	90464-18029-00	CLAMP	2	

CONTINUED ON NEXT FRAME ➤

CONTENTS

AIR INDUCTION SYSTEM	B6
CAMSHAFT. CHAIN	A9
CARBURETOR	B7-8
CLUTCH	C2-3
COWLING 1	E12 ,F1
COWLING 2	F2-4
CRANKCASE	B10
CRANKCASE COVER 1	B11-12
CRANKSHAFT. PISTON	A6
CYLINDER	A5
ELECTRICAL 1	F12 ,G1
ELECTRICAL 2	G2-3
EXHAUST	B9
FENDER	C10-11
FLASHER LIGHT	F7
FRAME	C8-9
FRONT BRAKE CALIPER	D12
FRONT FORK	D5-6
FRONT MASTER CYLINDER	E5-6
FRONT WHEEL	D11
FUEL TANK	D7-9
GENERATOR	F5
HANDLE SWITCH. LEVER	F11
HEADLIGHT	F9
INTAKE	B4-5
METER	F8
OIL CLEANER	B3
OIL PUMP	B2
RADIATOR. HOSE	A12 ,B1
REAR ARM	D1-2
REAR BRAKE CALIPER	E3
REAR MASTER CYLINDER	E10-11
REAR SUSPENSION	D3
REAR WHEEL	E1-2
SEAT	D10
SHIFT CAM. FORK	C6
SHIFT SHAFT	C7
SIDE COVER	C12
STAND. FOOTREST	E7-9
STARTER	C1
STARTING MOTOR	F6
STEERING	D4
STEERING HANDLE. CABLE	E4
TAILLIGHT	F10
TRANSMISSION	C4-5
VALVE	A7-8
WATER PUMP	A10-11

ELECTRICAL 2

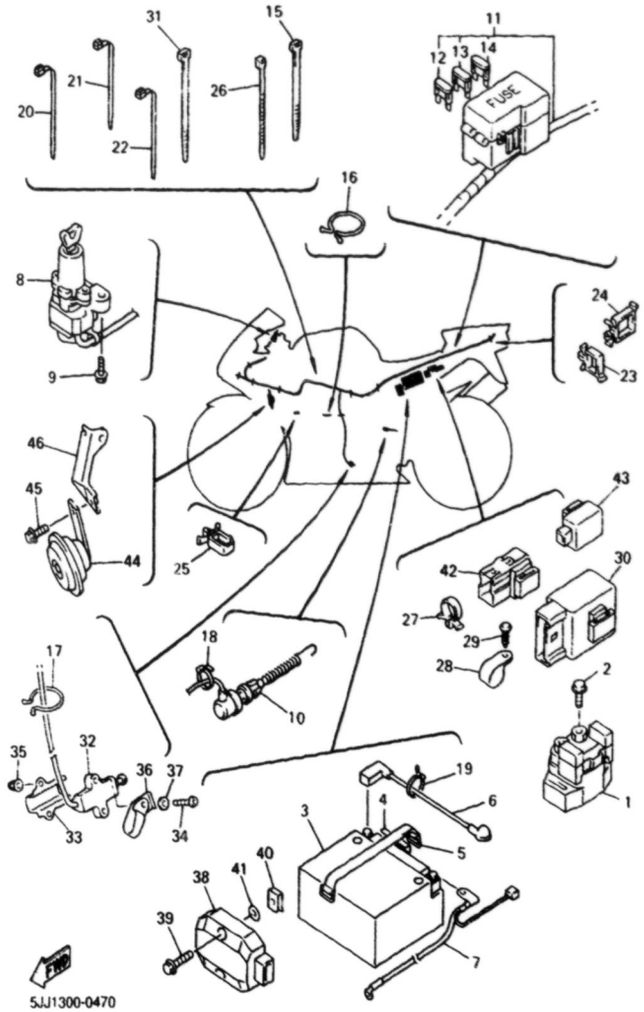

Ref. No.	Part Number	Description	Qty	Remarks
29	97707-40012-00	SCREW, TAPPING	2	
30	5EB-81950-20-00	RELAY ASSY	1	
31	1UA-82591-00-00	BAND	1	
32	5JJ-82566-00-00	SWITCH, SIDE STAND	1	
33	5JJ-82388-00-00	PLATE	1	
34	92017-05030-00	BOLT, BUTTON HEAD	2	
35	95607-05200-00	NUT, SELF-LOCKING	2	
36	90461-10002-00	CLAMP	1	
37	90201-057H5-00	WASHER, PLATE	1	
38	4JH-81960-01-00	RECTIFIER & REGULATOR ASSY	1	
39	95827-06025-00	BOLT, FLANGE	2	
40	90183-06053-00	NUT, SPRING	2	
41	90202-05187-00	WASHER, PLATE	2	
42	5JJ-81950-20-00	RELAY ASSY	1	
43	4MY-83350-01-00	FLASHER RELAY ASSY	1	
44	3TB-83371-01-00	HORN	1	
45	95807-06010-00	BOLT, FLANGE	1	
46	4XV-2134K-00-00	BRACKET, HORN	1	

CONTENTS

AIR INDUCTION SYSTEM	B6
CAMSHAFT. CHAIN	A9
CARBURETOR	E7-8
CLUTCH	C2-3
COWLING 1	E12 ,F1
COWLING 2	F2-4
CRANKCASE	B10
CRANKCASE COVER 1	B11-12
CRANKSHAFT. PISTON	A6
CYLINDER	A5
ELECTRICAL 1	F12 ,G1
ELECTRICAL 2	G2-3
EXHAUST	B9
FENDER	C10-11
FLASHER LIGHT	F7
FRAME	C8-9
FRONT BRAKE CALIPER	D12
FRONT FORK	D5-6
FRONT MASTER CYLINDER	E5-6
FRONT WHEEL	D11
FUEL TANK	D7-9
GENERATOR	F5
HANDLE SWITCH. LEVER	F11
HEADLIGHT	F9
INTAKE	B4-5
METER	F8
OIL CLEANER	B3
OIL PUMP	B2
RADIATOR. HOSE	A12 ,B1
REAR ARM	D1-2
REAR BRAKE CALIPER	E3
REAR MASTER CYLINDER	E10-11
REAR SUSPENSION	D3
REAR WHEEL	E1-2
SEAT	D10
SHIFT CAM. FORK	C6
SHIFT SHAFT	C7
SIDE COVER	C12
STAND. FOOTREST	E7-9
STARTER	C1
STARTING MOTOR	F6
STEERING	D4
STEERING HANDLE. CABLE	E4
TAILLIGHT	F10
TRANSMISSION	C4-5
VALVE	A7-8
WATER PUMP	A10-11